SPEEDWAY SEDANS AUSTRALIA INC

ONLINE – VERSION 21 – July 2026

SSA JUNIOR SEDAN
SPECIFICATION MANUAL

Rules and Regulations

Speedway Sedans Australia Inc
P.O. Box 163
HOLDEN HILL SA 5088

Enquiries to State Technical Representative or
Email: technical@speedwaysedans.com

Website - http://www.speedwaysedans.com

The content of this manual is to be read in conjunction with the SSA Class Technical Manual available as a separate download. Click Here

CLASS SPECIFICATION: SSA JUNIOR SEDAN

TABLE OF CONTENTS

	CLASS CRITERIA	4
	DIRECTION OF RACING	4
	JUNIOR SEDAN DERIVATION	4
1.	**BODY/ROLLING SHELL**	4
	Non-Original Body Firewall	7
2.	**ROLL CAGE Material and Design Option Effective 01 July 2019**	7
	Material Dimensions List	8
	Cage Diagrams	9
2a.	**ROLL CAGE for cars built and registered using original Material and Design**	15
3.	**BUMPER BARS & OPTIONAL EXTERNAL BARWORK**	22
	Rub Rail	25
4.	**ENGINE**	26
	4.1 Electronic Fuel Injection Configuration	25
	4.2 Carburettor Configuration	28
5.	**BATTERY AND ELECTRICAL SYSTEM**	30
6.	**EXHAUST SYSTEM**	31
7.	**COOLING SYSTEM**	31
8.	**TRANSMISSION/DRIVELINE**	32
9.	**STEERING**	33
10.	**SUSPENSION**	34
11.	**WHEEL TRACK**	36
12.	**WHEELBASE**	36
13.	**WHEELS**	35
14.	**TYRES**	36
15.	**BRAKES**	37
16.	**FUEL**	37
17.	**FUEL TANK AND FUEL SYSTEM**	37
18.	**TABLES**	40
	TABLE 1 List of approved/accepted makes/models	40
	TABLE 2 Engine List – Carburetted Cars	40
	TABLE 3 Engine List – EFI Cars	40
	TABLE 4 Throttle Body	40
	TABLE 5 Computer & Injector List	41
	TABLE 6 Valve Sizes	42
	TABLE 6a Valve Sizes – EFI Models	42
	TABLE 7 Carburettor List	43
	TABLE 8 Standard Dimensions – Carburetted Cars	43
	TABLE 9 Standard Dimensions – EFI Cars	44
	TABLE 10 Tyre Ratings	45
19.	**REFERENCE PHOTOS**	45

PLEASE NOTE: Where possible the data in the Specification Manual has been taken from www.automobile-catalog.com which is the main reference book used by the SSA Inc. Information that is not available at www.automobile-catalog.com is taken from Manufacturers Workshop Manuals. We have checked and cross checked the information in this Manual. If you do find something that does not seem to be right, anywhere in this Specification Manual, please let us know immediately, so that we can check it out and if it is wrong, we can change it. (01/07/17)

© **All rights reserved. Reproduction or translation of this Manual, in whole or part is not permitted without written authorization from Speedway Sedans Australia Inc.**

SPEEDWAY SEDANS AUSTRALIA INC. SPECIFICATIONS

SSA JUNIOR SEDAN

CLASS SPECIFICATION

The content of this manual is to be read in conjunction with the SSA Class Technical Manual available as a separate download. Click Here

Refer to Class Technical Manual for information regarding the following items – Click Here (01/07/20)

PRESENTATION
DRIVER SAFETY
PROTECTIVE CLOTHING
SEAT BELTS and INSTALLATION
SEATS and SEAT MOUNTING
DUAL REGISTRATION
WINDOW NET and FITTING
PADDING
FIRE EXTINGUISHER
TRANSPONDER MOUNTING
ENGINE SEALING

GLOSSARY OF TERMS & DEFINITIONS:

CDS – Cold Drawn Seamless
ERW – Electric Resistance Welded
CHS - Circular Hollow Section.
FMS - Flat Mild Steel
RHS - Rectangular Hollow Section.
W.T - Wall thickness.
O.D - Outer Diameter
I.D. – Inner Diameter
OEM - Original Equipment Manufacture; used to indicate parts used, or the complete vehicle as it left the production line from the original manufacturer and means for make and model unless otherwise stated.
CARBURETTOR - Is to have all working parts in use, e.g., needle and seat, fuel bowl, float, jets etc and fuel is to be naturally delivered to the main jet by atmospheric pressure. The air pressure in the carburettor venturi being lower than atmospheric pressure, allows fuel then to flow from the bowl to the carburettor venturi as the pressure in the carburettor throat decreases.
Fuel is then drawn down the venturi and carburettor throat by vacuum provided by the rotation of the engine.
Carburettors that are of different configuration than that of the above must be submitted to SSA Inc Technical for permission to be used. A complete description must accompany the submission to substantiate a request.

PROPRIETARY – (of a product) marketed under and protected by a registered trade name. (01/07/17)

SEDAN RACE CAR – Sedan class race car is built from a full hard top road car with a full metal roof (non-removable), seating a minimum of four (4) persons as per the compliance plate (or manufacturers specifications) and catalogued for sale in Australia. i.e., available to the public through authorised Dealer sale and service networks throughout Australia. (01/07/23)

Note – All new and existing cars must comply with all specifications as detailed. If "IT" is not in the book, it will be considered non-compliant until written approval for use is issued by SSA Inc Technical and ratified by the SSA Inc Board. (01/07/23)

Prior to constructing a car not listed in the tables at the rear of the class specification manual full details will be submitted to the SSA Inc Technical. Submissions will be handled in a confidential manner. (01/07/23)

Once approved the vehicle will be included in the Class Specification Manual and the opportunity will be available for any competitor to build the same vehicle. (01/07/17)

CRITERIA –

Competition Licence as per Speedway Australia Racing Rules & Regulations – Rule 2.2.4 b) All Junior Competition licences expire on the day prior to the competitor's 17th birthday.

DIRECTION OF RACING - The direction of racing will be only in an anti-clockwise direction.

Base model is used for silhouette, all measurements, and specifications. If unsure of base model options refer to www.automobile-catalog.com (01/07/17)

SSA JUNIOR SEDAN DERIVATION

a. The term "Stock" in Sedan Car Racing means precisely what it says, "STOCK STANDARD" as per Manufacture for the year, make and model and body type, so unless the specifications say otherwise, nothing is to be altered. If it is not specifically listed in the items that can be removed, then it must be in place. (24/11/18)

b. O.E.M. Original Equipment Manufacturer – means for make and model unless otherwise stated.

c. Cars must be at least 8 years old. No G.T. Models, Coopers, or Cooper "S" etc. Base models only.

1. BODY/ROLLING SHELL

KE55 Corolla body may be used on a KE30, and Ford Escort MK1 may change to MK 11 body – for Carburetted models only. All other specifications as per this manual.

a) Mono-construction sedan, coupe, or hatchback vehicle only. Full chassis cars or convertibles not permitted.

b) Parts to be removed:
   (i) All glass, interior trims, grille, door handles, ornamentation, bull bar, towbar, and helper springs. (Glass openings must not be covered with fibreglass or other material). (01/07/23)
   (ii) Instrument glass permitted.

c) The only panels which may be replaced with fibreglass / aluminum / alucabest / metal / plastic replica: - max. 2mm. thick.
   (i) Doors, bonnet, boot, front guards, nose, head, and taillight openings. (01/07/23)
   (ii) If the original roof is damaged, fibreglass overlay may be used over existing damaged roof.
   (iii) Under panel reinforcement plate NOT permitted.
   (iv) Replacement panels must be securely fastened, self-drilling (TEK) screws NOT to be used.
   (v) All replacement panels must be mounted within the OEM silhouette. (01/07/23)

d) If replica panels used: - To assist with the fitting of door panels, maximum of 25x25x3mm RHS, may be welded at windowsill height from A to C pillars. Doors to be securely bolted or welded or riveted using large head blind type rivets.

e) The door pillars may be notched for bar-work but otherwise must remain intact and in the original position. Roof inner panels may be notched but ONLY at the point where interference with roll cage occurs.
   All cars that have a welded in/non removable Dash Bar – Dash bar must remain in place. E.g., Hyundai Excel and Mitsubishi Lancer. (14/09/19)

f) Other panels that may be removed:
   (i) Radiator support panel.
   (ii) Front inner guard panels (provided they do not constitute suspension mounting points, e.g. McPherson strut (Double Wishbone).
   (iv) Seat mounts and other brackets in the cabin on the floor may be removed. (01/07/16)
   (iii) All other panels such as rear OEM parcel shelf and firewalls MUST remain in place.

g) Rear firewall may be modified to facilitate fitment of radiator. Any material removed must be of a minimum amount to give clearance around the radiator.

h) Front chassis rail forward of cross member must not be removed. If damaged, maybe repaired with maximum 1.6mm steel. Tie bar between chassis rails to be 50x50x2mm RHS maximum.

i) Front and rear stone trays must remain. A replica of the same size may be fabricated using a maximum of 0.9mm metal or fibreglass sheeting. As of the 1st July 2016 all cars fitted with plastic style bumpers/stone trays must have either the original or replica fitted of same or similar type and profile and may be made from fibreglass.

j) To assist with the appearance of cars, the rear quarter panels may be covered with fibreglass replica panels securely attached to the steel panel. Self-drilling (TEK) screws etc. or self-tapping screws are NOT to be used.

k) Only interior parts which may be removed: - Dash Panel – to assist with the roll cage installation. Replacement dash panel is not permitted to continue past the forward most point of the steering wheel across the width of the car. No extra decking or internal sheeting permitted in the cabin. If the rear radiator mounts against the rear firewall, the core area only of the rear firewall may be removed.

l) The boot floor must remain intact, except for a hole 25mm larger than the fuel tank, directly below the tank. Cars that have cross members across the boot floor pan area; the drilling of multiple holes as large as possible that will allow spilt fuel to escape quickly is allowed otherwise cross member not to be cut or drilled. If rusted body material has been removed from the boot area it must be replaced with 1.6mm steel. No cutting out of boot floor other than for fuel tank allowances. (01/07/18)

m) Rear View mirror – NOT permitted

n) Ballast of any description is NOT to be carried. E.g., Water in tyres etc.

o) Grille – If the grille is fabricated it must be of a steel welded wire mesh, no thicker than 5mm diameter x 25mm minimum opening or panel steel, 1.6mm maximum. Folded sections, for strength, are not permitted. Fibreglass or plastic is also acceptable. (01/07/23)

p) Light openings must be filled using max. 1.6mm metal sheet, fibreglass, or plastic. (01/07/23)

q) Daihatsu Charade rear wheel arch may be cut away to a maximum of 50mm clearance around the rear wheels and replaced with a fibreglass copy of original silhouette rear wheel arch. Original metal inner and outer edges are to be re-welded together if cut back. This rule is for cars with flat top wheel arches, the same rule will apply for any other new models introduced if they have a flat top wheel arch.

r) Bonnet and boot lid to be securely fastened.
   (i) Four bonnet pins (five for fibreglass) to be 12mm minimum to 15mm maximum mild steel or approved equivalent.
   (ii) Bonnet pins to be in the bonnet not sides of mudguards. No mounting pins in the side of panels, i.e., mud guards.
   (iii) Bonnet lock pins 3mm min to 6mm max. Heavy duty large reinforcing washers (min 30mm O.D.) to be fitted to all bonnet pin holes on fibreglass bonnet.
   (iv) Similarly, boot lid to be securely fitted, using pins and large washers as for bonnet. A removable boot lid to be securely mounted in four points.
   (v) The use of Dzus clips on bonnets or boot lids is not acceptable. Exception being hatchbacks with a permanently fixed hatch panel. (24/11/18)

s) Hinged bonnet and boot lid permitted, using minimum of two pins. Skeletonising not permitted on hinged

panels within 50mm of hinges. The hinged panel is to be welded to the bonnet or boot skin.

t) Except for the bumper and bumper support bars, all bar work outside the sub-frame rails, skirts and forward of the OEM radiator support panel i.e., under front guards, shall be a maximum 25x1.6mm O.D. CHS Fig. 2(i) (ii) (iii). Max 3 braces per side, one may be a vertical upright attached to the bumper support. No other bar work to attach to bumper bars or supports.

u) Cars with steering boxes only; may run the sub frame brace bars on the outside of the chassis rather than inside or on top, maximum of 38x3mm CHS or 50x25x3mm RHS are to be used. Refer to Fig 2 (iii) (01/07/18)

v) Transmission tunnel may be NOTCHED ONLY at the points where front and rear spreader bars intersect transmission tunnel. Under seat floor pan/tunnel area may also be modified to assist in the proper attachment of seat base bar work or sub frame and harness mounting tabs. All modifications must be of a professional standard and be fully welded. (01/07/21)

w) OEM for make and model rear spoiler or roof wing may be used in OEM position. (01/07/2024)

Fig 2. (i)

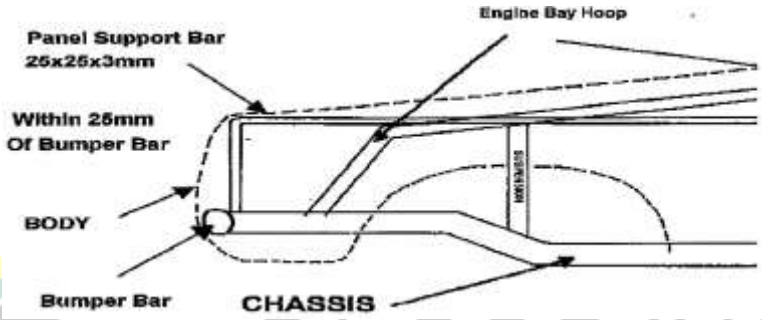

Fig.2 (ii)

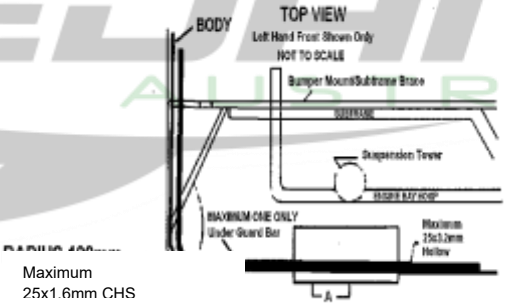

Fig.2 (iii)

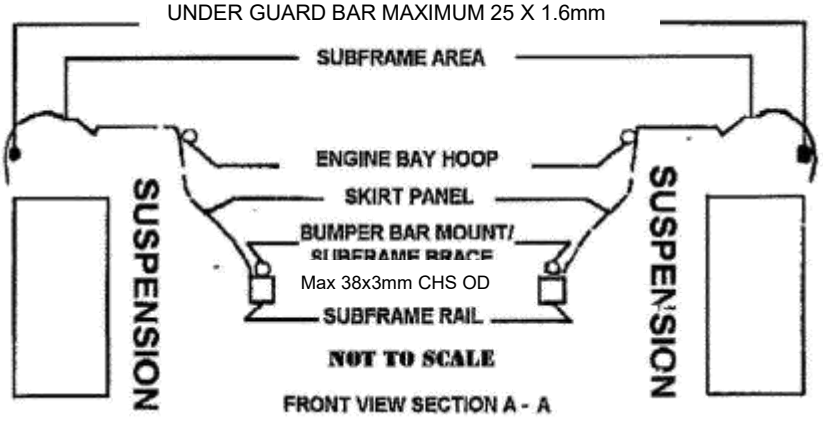

Cars with steering boxes only; may run the sub frame brace bars on the outside of the chassis rather than inside or on top, maximum of 38x3mm CHS or 50x25x3mm RHS (01/07/18)

NON-ORIGINAL BODY FIREWALLS:
The driver must be protected and isolated from mechanical, fuel, electrical and exhaust components by metal firewalls, min 0.9mm thick.

HATCHBACK REAR FIREWALL (Mirage, Excel (2 Door), Charade etc) (18/10/25)
a) Full rear firewalls in hatchbacks are optional.
b) Full rear firewalls in hatchbacks maximum dimensions if used:
(i) Maximum Size Top: Horizontal from the rear door at window height to the rear axle centreline. (Point 1)
(ii) Maximum Size Front: Rear axle centreline at window height (Point 1) to the OEM rear seat belt mounts. (Point 2)
c) For hatchbacks that do not use a full rear firewall to separate the fuel tank from the driver – the fuel tank must be fully enclosed – this includes the base as well as the sides and top.



ROLL CAGE (01/07/22)
Newly constructed vehicles will be able to option the use of the previous Section 2a Roll cage Material & Design

Both Roll Cage specifications will be subject to their individual respective design and material compliance requirements and are unable to be cross referenced.

Construction of Roll Cages in Section 2 as published in this Specification Manual inclusive of the Material and Design, is the preferred option and is highly recommended by Speedway Sedans Australia.

2. ROLL CAGE – Material and Design Option Effective for Registration commencing 1 July 2021

GENERAL

a) The roll cage is to provide a safe enclosed environment for the driver and is intended to prevent the collapse of the cabin area under impact.
b) The roll cage is to fully enclose the driver with the roll bar tubing that constitutes a cage type framework, braced fore and aft.
c) All bar work must be entirely inside the OEM glassed area of the cabin.
d) The cage must extend behind the driver's seat and forward to the windscreen area and incorporate adequate foot protection.
e) All A-leg and roof hoop options must be constructed so as the driver can enter and exit the car through the driver's side window opening at all times. A-legs and other roll cage bracing that protrude through the driver's side window opening that significantly impede the driver's ability to enter or exit the car will be deemed non-compliant. (01/07/23)

f) All bends to be made using a bender with the correct size former using a cold working process with no evidence of crimping, wall failure or significant weakening. The centreline bend radius must be 3 times the tube diameter. If during the bending process the tubing is ovalized the ratio of minor to major diameter must be 0.9 or greater.
g) All bars to be suitably notched to accommodate correct assembly of roll cage.
h) All welding is to be of a high quality with adequate penetration using only gas shielded arc welding techniques. e.g., mig or tig. All joints to be fully welded.
i) Sonic Testing to be performed only on a straight section of tube. It is the owner's responsibility to remove paint/powder coating if required. (Sonic Test at not less than 2.40mm ABSOLUTE) (01/07/23)

MATERIAL SPECIFICATION

a) Please refer to Minimum Dimensions Table following for bar size and types. (01/07/23)
b) Minimum Cold Drawn Seamless (CDS) mild steel tube (CHS) with a minimum tensile strength of 350 MPA. Unless otherwise specified. (01/07/2020)
c) Where RHS is permitted all tube to be of AS1163 standard mild steel with a minimum tensile strength of 350 MPA.
d) No galvanising on any tube allowed.
e) All tube must display good elongation and welding properties.

ROLL CAGE – Material and Design Option Effective for Registration commencing 1 July 2021

MINIMUM DIMENSIONS TABLE

Bar #1	Main Hoop Bar	44.45 x 2.6mm	CHS
Bar #2	Roof Hoop Bar	44.45 x 2.6mm	CHS
Bar #3	Front A Legs / A Pillar Bar	44.45 x 2.6mm	CHS
Bar #4	Centre Roof Bar	38 x 2.6mm	CHS
Bar #5/6	Main Hoop Centre Spreader Bar	38 x 2.6mm	CHS
Bar #6/5	Seat Back/Shoulder Harness Bar	38 x 2.6mm	CHS
Bar #7	Main Hoop Diagonal Bars	38 x 2.6mm	CHS
Bar #8	NASCAR Door and Dropper Bars	38 x 2.6mm	CHS
Bar #9	Passenger Side Door Bars	38 x 2.6mm	CHS
Bar #10	Lower Windscreen Dash Bar	38 x 2.6mm	CHS
Bar #11	Centre Windscreen Bar (14/09/19)	25 x 2.6mm	CHS
Bar #12	Rearward Brace Bars	38 x 2.6mm	CHS
Bar #13	Foot Protection Bar	38 x 2.6mm	CHS
Bar #14	Foot Protection Support Bar (14/09/19)	25 x 2.6mm	CHS
Bar #15	Roll Cage Sub Frame Bar – these 3 choices are the only size and types of material accepted	44.45 x 2.6mm or 40 x 40 x 3.0 mm or 50 x 50 x 2.5mm	CHS RHS RHS
Bar #16	Lower Spreader Bar – Front	38 x 2.6mm	CHS
Bar #17	Lower Spreader Bar – Front Brace	38 x 2.6mm	CHS
Bar #18	Lower Spreader Bar - Rear	38 x 2.6mm	CHS
Bar #19	Lower Windscreen / Dash Bar Support - optional	38 x 2.6mm	CHS
Bar #20	Seat Base Mounting / Harness Mounting Bar	38 x 2.6mm	CHS
Bar #21	Rear Chassis Sub Frame Rail – these 5 choices are the only size and types of material accepted. (01/07/21)	44.45 x 2.6mm or 38 x 2.6mm or 40 x 40 x 2.5mm 40 x 40 x 3mm	CHS CHS RHS RHS

		50 x 50 x 2.5mm	RHS
Bar #22	Front Chassis Sub Frame Rail – optional – these 3 choices are the only size and types of material accepted	38 x 2.6mm or 40 x 40 x 2.5mm or 50 x 25 x 3mm	CHS RHS RHS
Item #23	Additional / Optional Roll Cage Supports / Bracing	25 x 2.6mm Minimum	CHS

POINT A	The point where top NASCAR door bar (Bar #8), A pillar leg (Bar #3) and lower windscreen dash bar (Bar #10) intersect – Refer Fig 3 (ii)
POINT B	The point where the top NASCAR door bar (Bar #8), Main Hoop (Bar #1) and Main Hoop Centre Spreader Bar (Bar #5) intersect – Refer Fig 3 (ii)
POINT C	The point where sub frame bar (Bar #15), base of A pillar leg (Bar #3) and lower spreader bar – front (Bar #16) intersect – Refer Fig 3 (ii)

Fig 3 (i)

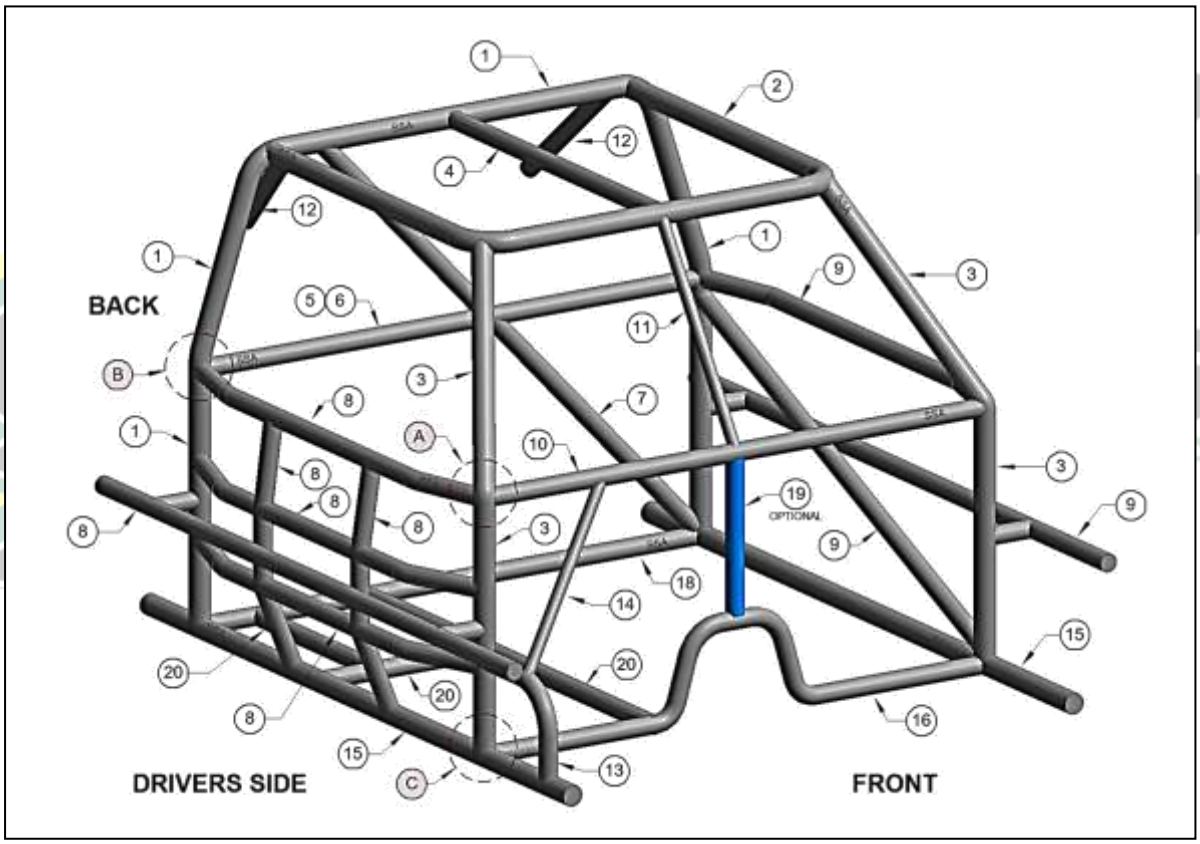

Fig 3 (ii)

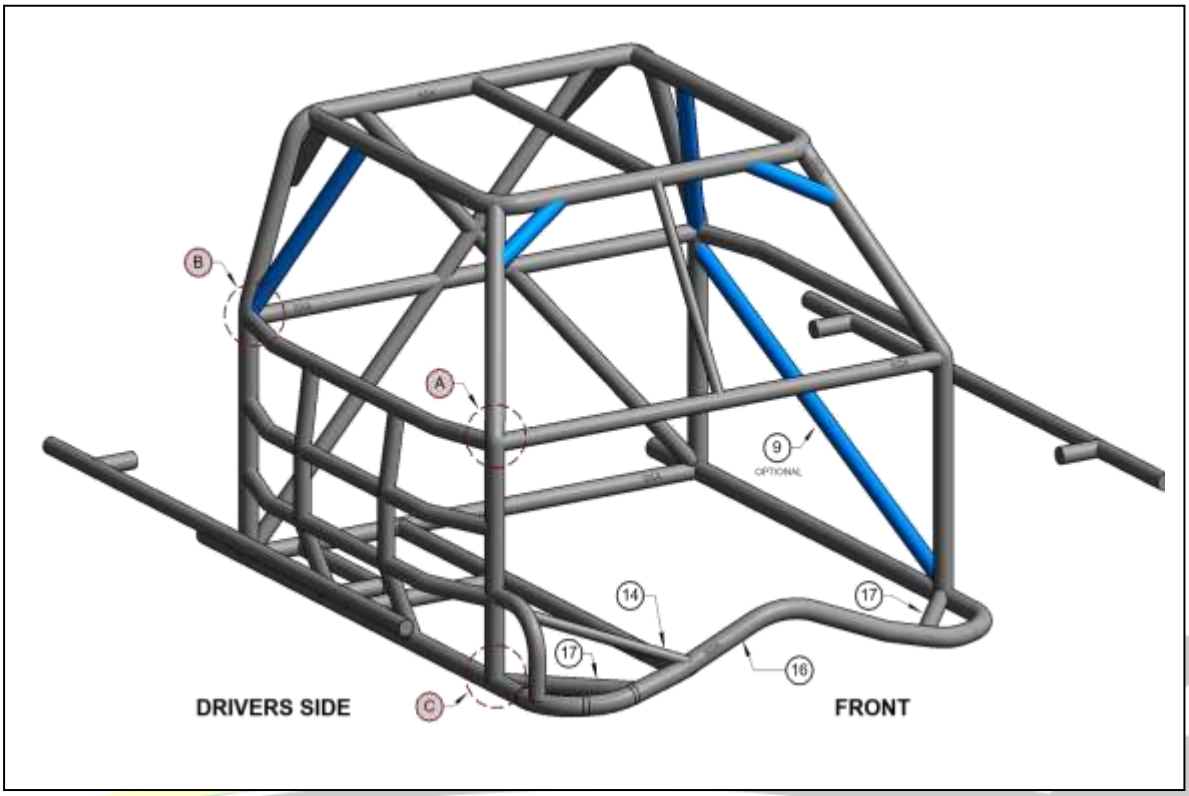

Fig 3 (iii) updated 01/07/2020.

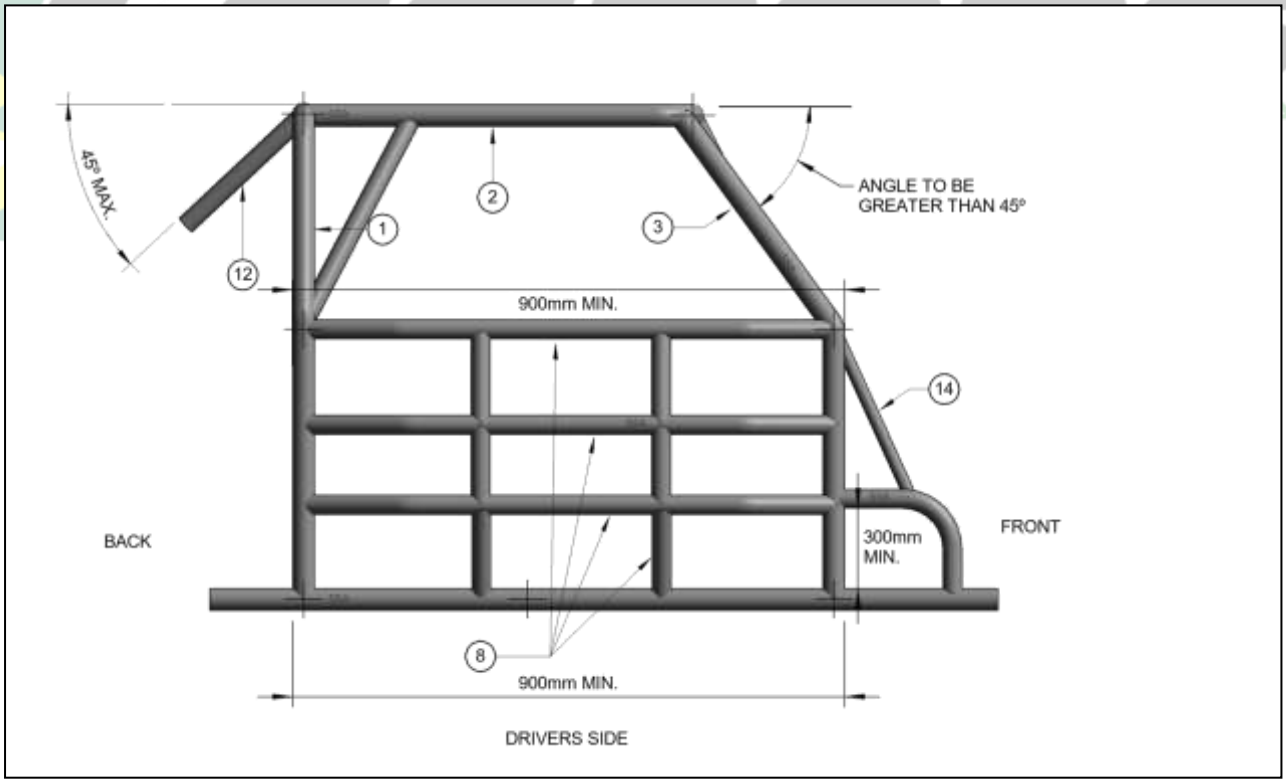

Fig 3 (iv) a

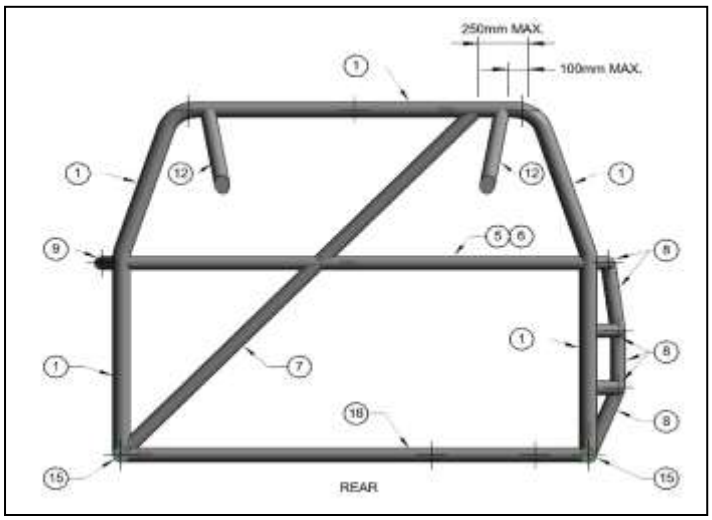

Fig 3 (iv) b

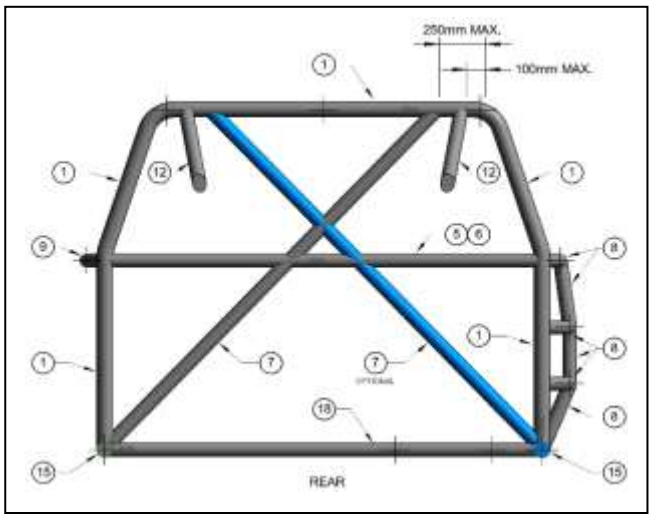

1. **Main Hoop Bar**: Bar #1
   The rear main hoop will be made of one continuous length of tubing. See Fig 3(i). Hoop to be within 50mm of sides of roof at the narrowest point, be within 50mm of the inside line of the 'B Pillar' measured at point 'B' of Fig 3 (i) and be completely inside the body line. The base of the hoop will be fitted square in the car. If the Main Hoop requires bending to meet the 50mm requirement at point 'B' then the bend can only be formed within 50mm of this point. The distance between the rear of the main hoop and the front of the A pillar front leg at the intersection with the sub frame rail and at rear of the main hoop and front A pillar leg at the intersection of top NASCAR bar to be minimum of 900mm.

2. **Roof Hoop Bar**: Bar #2
   Option 1: To be formed from one continuous length of tubing and be welded to the Main Hoop Bar (Bar #1) on each side of the roll cage. This bar incorporates the Top Windscreen Bar. The windscreen part of the Roof Hoop Bar to be no further rearward than 200mm from the front pinch weld lip of the front windscreen opening at narrowest point. (01/07/2020)

   Option 2: To be formed using the top part of the Front A Legs (option 2) and be welded to the Main Hoop Bar (Bar #1) on each side of the roll cage. A Windscreen bar is to be fitted and welded between the two A Legs Bars and be no further back than 200mm from the front pinch weld lip of the front windscreen opening at narrowest point. (01/07/2020)

3. **Front A Legs/A Pillar Bar: Bar #3 (01/07/2020)**
   GENERAL
   a) The A Pillar part of the front legs MUST BE GREATER THAN 45º (See Fig 3(iii))
   b) Be no further rearward than 300mm (250mm for Junior Sedans) behind and 50mm inwards of the OEM door opening at points A & C. Refer Fig 3 (i). The pinch weld is to be used as the reference point for measuring horizontally from a line between the A Pillar and the B Pillar at windowsill height. (01/07/23)
   c) When bending this bar to meet the sub frame rail the bend must be within 50mm of Point A. Refer Fig 3 (i). (When using option 1 or 2)

   Option 1 - Two front legs shall be formed from one continuous length of tubing and be welded to the sub frame rail (Bar #15) at the bottom at point C and the front corners of the Roof Hoop Bar (Bar #2) at the top.

Option 2 - Two front legs shall be formed from one continuous length of tubing and be welded to the roll cage sub frame (Bar#15) and continue up as the A Leg and be bent toward and welded to the Main Hoop Bar (Bar#1).

Option 3 – **Dash Hoop Bar and Roof Hoop Bar**. This requires the A Pillar/Front Leg to be formed in two straight pieces. Lower A Pillar/Front Leg to be welded to the Roll Cage Sub Frame bar (Bar #15) at Point C and to the Dash Hoop Bar at Point A. Upper A Pillar/Front Leg to be mounted upwards from Point A to the Roof Hoop Bar and be welded to the front corners of the one-piece Roof Hoop Bar (Bar #2). If using 38x2.6mm tube as the Dash Hoop Bar, the A Pillar/Front Legs will be notched to fit around this tube and be fully welded on all sides. The two pieces of the A Leg must intersect at the same point on the Dash Hoop Bar bend.
The Dash Hoop Bar is the combination of Bars #8, #9, #10 – in one continuous piece.

ALL A-LEG AND ROOF HOOP OPTIONS MUST BE CONSTRUCTED SO AS THE DRIVER CAN ENTER AND EXIT THE CAR THROUGH THE DRIVERS SIDE WINDOW APERTURE AT ALL TIMES. A-LEGS AND OTHER ROLL CAGE BRACING THAT PROTRUDE THROUGH THE DRIVERS SIDE WINDOW APERTURE THAT SIGNIFICANTLY IMPEDE THE DRIVER'S ABILITY TO ENTER OR EXIT THE CAR WILL BE DEEMED NON-COMPLIANT.

4. **Centre Roof Bar**: Bar #4
   A one-piece centre roof bar to be welded between the main hoop and the roof hoop, in the centre line of the roll cage.

5. **Main Hoop Centre Spreader Bar**: Bar #5
   Main Hoop Centre Spreader Bar: Bar #5 A one-piece straight bar/or two-piece if Diagonal bar is one piece is to be fitted to the Main Hoop within 50mm of top NASCAR bar height at Point B. Refer to Fig 3 (i). To be

   connected to the other side of the Main Hoop within 50mm of the top passenger NASCAR door bar. This bar may act as the Seat Back/Shoulder Bar (Bar #6). (01/07/2020)

6. **Seat Back / Shoulder Harness Bar**: Bar #6
   A one-piece mounting bar to be fitted to mount the seat and seat belts, to be positioned so that the belts are anchored a maximum of 300mm from the point at which the shoulder belts pass through the back of the seat. Top seat mount to be no further than 75mm lower than this bar.

7. **Main Hoop Diagonal Bar**: Bar #7
   Main Hoop Diagonal Bar: Bar #7 A two-piece diagonal brace/or one piece if Main hoop spreader bar is two pieces will be fitted in the roll cage behind the driver's head, within 250mm of the bend and down to the point where it intersects the Main Hoop Centre Spreader Bar (Bar #5). From this point the second piece in the same plane and angle as the top diagonal brace will follow down to the point where the hoop joins the LHS Roll Cage sub frame base. Refer Fig 3 (i). A second diagonal brace may be fitted and may need to be in 3 pieces. All braces must intersect with the Main Hoop Centre Spreader Bar/Diagonal bar. (01/07/2020)

8. **NASCAR Door and Dropper Bars**: Bar #8
   On the driver's side, three one-piece horizontal bars that will have a deflection/bend at each end of the bar which allows the NASCAR bars to be positioned towards the door skin and placed between front and rear cage legs, evenly spaced between windowsill and roll cage sub frame. Top NASCAR door bar to be within 50mm of the window opening. The centre or bottom horizontal bar may run straight through, from front wheel arch to the rear wheel arch, and then have two separate pieces of 38 x 2.6mm CHS turning to the NASCAR bar connecting to the roll cage Main Hoop Bar and to the 'A Pillar' leg. There will be a minimum of two vertical dropper bars as close to evenly spaced as possible between the front leg, and the rear hoop

for each of the openings created by the NASCAR bars, making a minimum of six vertical bars to be fitted. Refer to Fig 3 (i). OEM Door B pillar may be notched ONLY; not removed to allow fitment of bar work.

9. **Passenger Side Door and Dropper Bars**: Bar #9
Passenger side will have a minimum of two one-piece bars attached at the Front A pillar legs and the Main Hoop Bar. One of these must be horizontal at windowsill height which will be at the same height as the top NASCAR bar on the driver's side. The second bar cannot be vertical. Top NASCAR door bar may be straight or deflect outwards. (01/07/21)

10. **Lower Windscreen Dash Bar**: Bar #10
A one-piece straight bar mounted horizontally between the Front A pillar legs must be fitted within 50mm at top NASCAR bar height.

11. **Centre Windscreen Bar**: Bar #11
A one-piece straight bar is to be fitted at centreline of cage at 90º to and between roof hoop (bar #2) and the lower windscreen bar (bar #10).

12. **Rearward Brace Bars**: Bar #12
GENERAL
Both rearward brace bars options must connect to the rear of the main hoop within 100mm of the centre of the bend and extend rearward at a maximum angle of 45º down from the horizontal attaching to the rear subframe rails or a rear subframe chassis spreader.
Option 1 – two one-piece rearward brace bars free of bends.
Option 2 – a crucifix design with one bar being two pieces. The one-piece bar must be attached to the driver's side. All 3 bars to be free of bends. (01/07/2020)

13. **Foot Protection Bar**: Bar #13
When driver's feet are forward of the front roll cage A pillar leg (bar #3) in race position foot protection is mandatory. See Fig 3 (iii)
Foot protection bar is to attach to the Front A pillar legs (Bar #3) no lower than 300mm from the roll cage sub frame base (bar #15). To be measured from the top of the foot protection bar to the base of the roll cage sub frame. To protrude forward **as far forward as possible**(30/6/26) toward the front firewall / RHS front wheel well and re-attach to the roll cage sub frame base (Bar #15) to protect the driver's feet in the event of side intrusion. See Fig 3 (iii) (01/07/21)
Foot protection area to be completely filled with either 3mm mild steel or 5mm aluminium plate. See Fig 3 (iii) When using a bolt in removable foot protection plate, it is to be attached to the outside of the foot protection bar using a minimum of 4 x 50x50x3mm (square) or 4 x 55x40x6mm (rectangular) mild steel tags attached no further than 200mm apart with 8mm or 5/16" bolts facing inward, with no protrusions. The larger the foot protection area, the more tags required. Multi hole or scalloped tags are NOT permitted.

14. **Foot Protection Support Bar**: Bar #14
The foot protection bar is to be braced to substantial bar work to the left. This is to prevent the collapse of the foot protection bar in the event of side intrusion. See Fig 3 (i)

15. **Roll Cage Sub Frame Bar**: Bar #15
Roll cage sub frame bar to be securely welded to body shell at a minimum of 4 points; 2 on each side of car, at a distance no closer together than 500mm. If using the 50x50x2.5mm RHS option, roll cage legs may be inserted into the RHS and fully welded.
.
OPTION: It is permissible to use a one-piece sub frame rail and spreader bar, joined in the centre of the vehicle at the transmission tunnel. Join must use a spigot/sleeve and be plug welded at two locations on

both sides of the join with the join fully welded. If the spreader bar part of this option is more than 200mm forward of the A Pillar leg then a support brace (Bar #17) of a minimum 38x2.6mm CHS is to be fitted from the spreader bar to a point no less than 200mm from the front A pillar leg. Refer Fig 3 (ii)

16. **Lower Spreader Bar Front**: Bar #16
A sub frame spreader bar at front A pillar legs bar to be fitted. 200mm is the maximum distance forward or rearward before a brace is required (Bar #17). No spreader bars that have any deflection shall be allowed if they are under any seating. That is deemed to be any area from the front edge of the seat to the rear edge of the seat base for all seats fitted to the vehicle. (01/07/21)
Refer also to Option above in Item #15.

17. **Lower Spreader Bar – Front Brace**: Bar #17
If bracing is used must be a minimum of 38x2.6mm CHS and be fitted from the spreader bar to a point no less than 200mm from the A pillar front leg. Refer to Option in Item #15. Refer Fig 3 (ii)

18. **Lower Spreader Bar Rear**: Bar #18
A sub frame spreader bar to be fitted at the base of the Main Hoop Bar (Bar #1). This bar is to be as straight as possible. It is permitted to notch the body shell/transmission tunnel for the fitment of this bar in an endeavour to keep it as straight as possible. If the bar is bent to allow for the transmission tunnel it must be braced vertically to the centre of the centre spreader bar with 25x2.6mm CHS.

19. **Lower Windscreen / Dash Bar Support (optional)**: Bar #19
A bar can be fitted between lower windscreen/dash bar and the front spreader bar.

20. **Seat Base Mounting/Harness Mounting Bar**: Bar #20
A fabricated or formed tubing frame for the mounting of seat base and harness will consist of the following options as a minimum. Tubing may be bent to accommodate fitment.
It is not permitted to drill through these bars for the mounting of seat base without the fitment of sleeves. Refer to image. The use of tabs made out of 3mm minimum mild steel are recommended. All harness tabs to be as per specification. Refer to Class Technical Manual for tab specification.

21. **Rear Chassis Sub Frame Rail: Bar #21**
Rearward of the roll cage to where sub frame rails intersect with the rearward brace bars and incorporate bumper supports and mounts are to be either 44.45 x 2.6mm CHS or 38x2.6mm CHS or 40x40x2.5mm RHS or 40x40x3mm RHS or 50x50x2.5mm RHS. Rearward sub frame bars to be symmetrical to the common centreline of the car. (01/07/21)

22. **Front Chassis Sub Frame Rail – OPTIONAL: Bar #22**
Forward of the roll cage to where sub frame rails intersect with and incorporate bumper supports and mounts are to be 38x2.6mm CHS or 40x40x2.5mm RHS or 50x25x3mm RHS.

23. **Additional Optional Roll Cage Supports/Bracing:**
Other additional optional roll cage supports or braces are permitted and are to be a minimum of 25x2.6mm CHS.

24. **Windscreen Mesh**: Mesh screen is to cover the entire area from A Pillar front leg (Bar #3) to Centre Windscreen (Bar #11) and from top of dash panelling to Roof Hoop Bar (Bar #2).
(i) Maximum effective mesh size 50x50mm mild steel. Mesh gauge 3mm.
(ii) Windscreen mesh to be welded or clamped with metal clamps to the roll cage A Pillar front leg (Bar #3) and Centre Windscreen bar (Bar #11).
(iii) Minimum of 4 (four) clamps.

(iv) Mesh may be welded to body of Mono cars.

25. **Anti-Spear Plates**: 3mm steel or 5mm aluminium (NOT to be lightened by any means)
   (i) The anti-spear plates to be mounted to the outside of the NASCAR bars and overlap the edge of the NASCAR bar work.
   (ii) Recommended 1/3 length between roll cage legs, to be fitted on the driver's side, from base of roll cage to top NASCAR bar, forward of the first vertical door dropper bar to the front leg of the roll cage.
   (iii) If using 3mm steel, plate/plates to be fully stitch welded. (01/07/23)
   (iv) If using a single 5mm alloy plate, it must be bolted on using a minimum of 6 – 50x50x3mm (square) or 55x40x6mm (rectangular) mild steel plate tags/plates. (01/07/23)
   (v) If using 3 individual 5mm alloy plates, they must be bolted on using a minimum of 4 – 50x50x3mm (square) or 55x40x6mm (rectangular) mild steel tags/plates per piece. (01/07/23)
   (vi) Tags/plates to be solid square or rectangular with one hole only for the mounting point. (01/07/23)
   (vii) All alloy plates must be bolted on using a minimum of 8mm or 5/16" high tensile bolts with no protrusions. (01/07/23)

26. **FUEL TANK PROTECTION BAR: Bar #26** (01/07/2020)
Bar must be constructed of minimum 38x2.6mm CDS or 40x40x3mm RHS with 25x2.6mm CDS minimum angled brace bars to be fitted on each side and be 25mm clear all-around tank and filter, projecting a line.

from the rear wheel centre to the bar.
Note - only applicable to dual registered Street Stocks and require a Fuel Tank Protection bar.

27. **HEAD PLATE**
A minimum of 50mm clearance is required between the helmet, including fresh air intakes and associated fixtures, to any part of the head plate and roll cage when the driver is seated and harnessed. (01/07/2020)

All steel or aluminium head plates are to cover in full the opening above the drivers. To extend from roof hoop (bar #2) on the outside to the centre bar (bar #4), front roof hoop (bar #2), to main hoop (bar #1). Cutting off corners or any lightening of any form is NOT permitted. (01/07/23)

REMOVABLE STYLE
a) Head plate to be of 5mm aluminium or 3mm mild steel (NOT to be lightened by any means).
b) Plate to be mounted from above and be proud of main hoop (bar #1), centre roof bar (bar #4) and side of roof bar (bar #2) as per Fig 4, with 10 mild steel Plate Tabs of 50x50x3mm (square) or 55x40x6mm (rectangular) will be required when using a removable Head Plate.
c) Plate to be mounted, from above, with 10 x 8mm dia. High Tensile bolts with lock nuts/locking devices fitted, 3 each side, 2 front, 2 rear. Heads of bolts to be downwards and spot welded e.g., no protrusions. (01/07/23)
d) Plate tabs to be solid square or rectangular with one only hole for the mounting bolt.

Fig 4 Head Plate

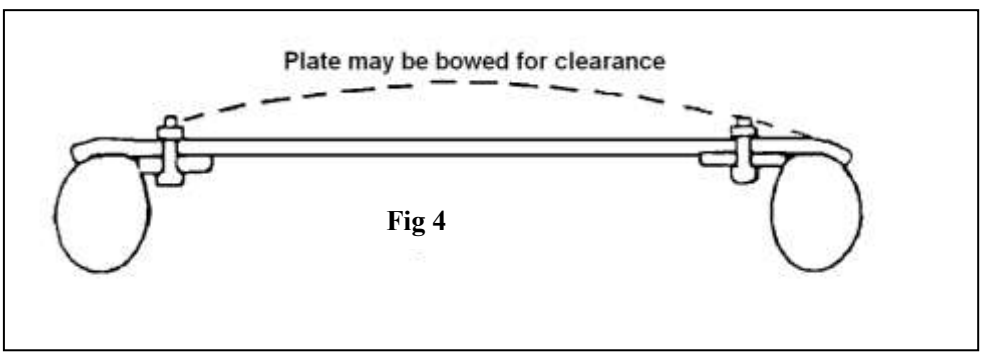

Fig 4

NON-REMOVABLE STYLE

A full size 3mm mild steel head plate may be fully welded to top of Main Hoop bar (Bar #1), centre roof bar (Bar #4) and side of roof bar (Bar #2) using practice as outlined in General Item g).

2a. ROLL CAGE for cars built and registered using original Roll Cage Material and Design (01/07/22)

Fig 3(i) details the minimum structural requirements. Each item number is referred to in the text below.

The roll cage is to prevent the collapse of cabin area under impact; all bar work must be entirely inside the OEM glassed area of the cabin.

Roll cage, to enclose the driver, to be full width and full height of the cabin area. The roll bars are to constitute a cage type framework, braced fore and aft. The cage must extend from behind driver's seat forward to the windscreen area and incorporate protection for the driver's feet.

All roll bar material must be of good quality mild steel, AS1450, minimum Gr300. MINIMUM 38mm O.D. x 3.0mm w.t. CHS. Sonic testing to be performed only on a straight section of tube. It is the owner's responsibility to remove paint/powder coating if required. (Sonic test at not less than 2.70mm ABSOLUTE). Aluminium based materials not permitted. (01/07/23)

All bends to be made using a pipe bender with the correct size former, with no evidence of crimping, wall failure, or significant weakening. Galvanised tubing or welding over threaded tubing is not permitted in any structural bar work. Water pipe fittings or malleable fittings are not permitted. Roll cages built using other than fusion welding techniques will not be accepted. Gussets on welded joints may be required at daylight inspection of weld quality.

MINIMUM DIMENSIONS TABLE (01/07/23) (Bar #11 correction 24/04/24)

Bar #1	Main Hoop	38x3mm O.D.	CHS
Bar #2	Roof Hoop	38x3mm O.D.	CHS
Bar #3	Front Legs / A Pillar	38x3mm O.D.	CHS
Bar #4	Centre Roof Bar	32x3mm O.D.	CHS
Bar #5	Rear Diagonal – single Rear Diagonal – crucifix 2nd bar	38x3mm O.D. 32x3mm O.D.	CHS CHS
Bar #6	Seat Back/Shoulder Belt Bar	38x3mm O.D.	CHS
Bar #7	Door Bars – RH Side	38x3mm O.D.	CHS
Bar #8	Door Bars – LH Side	38x3mm O.D.	CHS
Bar #9	Lower Windscreen/Dash Bar	38x3mm O.D.	CHS
Bar #10	Centre Windscreen Bar	25x3mm O.D.	CHS
Bar #11	Rearward Brace Bars	34mm O.D.	CHS
Bar #12	Foot Protection Bar	38x3mm O.D.	CHS
Bar #13	Sub-Frame	38x3mm O.D. 50x50x3mm 50x50x5mm	CHS RHS Angle
Bar #14	Spreader Bars	38x3mm O.D. 35x35x3mm	CHS RHS
Bar #15	Quarter Window Bar	25x3mm O.D.	CHS
Bar #16 - Optional	Lower Windscreen/Dash Bar	25x3mm O.D.	CHS
Bar #17	Foot Protection Support Bar	25x3mm O.D.	CHS
Bar #18	Dropper Bar	38x3mm O.D.	CHS
	Windscreen Mesh	50x50x3mm	Mesh
	Anti-Spear Plates	3mm Steel 5mm Aluminium	
	Head Plate	3mm Steel 5mm Aluminium	

POINT A	The point where top NASCAR door bar (Bar #7/8), A pillar leg (Bar #3) and lower windscreen dash bar (Bar #9) intersect – Refer Fig 3 (i)
POINT B	The point where the top NASCAR door bar (Bar # 7/8), Main Hoop (Bar #1) and Seat Back/Shoulder Belt Bar (bar #6) intersect – Refer Fig 3 (i)
POINT C	The point where sub frame bar (bar #13), base of A pillar leg (Bar #3) and lower spreader bar – front (Bar #14) intersect – Refer Fig 3 (i)

1. **Main Hoop**: The rear main hoop will be made of one continuous length of tubing. See Fig.3 (i). Hoop to be within 50mm of sides of roof at the narrowest point, be within 50mm of the inside line of the B pillar measured at point B of Fig. 3 (i) and be completely inside the body line. The base of the hoop will be fitted square in the car.

2. **Roof Hoop**: The roof hoop will be formed from one continuous length, or alternately be replaced by using one continuous length to form the front leg A pillar bar, which then continues back to the rear hoop, with a top windscreen bar being fitted to complete the hoop. The roof hoop to be within 50mm of the roof at sides, within 50mm of windscreen opening, and be welded to the main hoop to form a halo around the driver's head – it does NOT have to follow the windscreen within 50mm of the entire opening. (01/07/16)

3. **Front Legs / A pillar**: The two front legs are to be formed each from a continuous length and be welded to the roll cage base (bar 13) and the roof hoop (bar 2) or if using the second option for the roof hoop, welded to the main hoop (bar. 1).

   A third option is: The top NASCAR bar, lower windscreen bar and passenger's top NASCAR bar may be formed in one continuous bar. This entails the front leg to be formed in 2 pieces. One from the roll cage base to this hoop with the upper section from this hoop upwards to the roof hoop.

   The top part of all options must join the roof hoop at a point no further than 50mm from the windscreen opening and follow downwards to point A of Fig. 3 (i) at an angle of 45 degrees downward from the horizontal.

Newly constructed cars, as of 22nd August 2014 the front leg will be no further than 250mm behind, and 50mm inwards of the OEM door opening at points A & C of Fig 3 (i). The pinch weld is to be used as the reference point for measuring horizontally from a line between the A Pillar and the B Pillar at windowsill height. (01/07/23)

Cars previously registered prior to the 22nd August 2014 will fully comply with the relevant Specification Book, with that being the last printed version of the Junior Sedan Specification Manual – 2011.

4. **Centre Roof Bar**: Centre roof bar to be minimum of 32x3mm CHS and shall be welded between the main hoop and the roof hoop, in the centre line of the roll cage.

5. **Rear Diagonal**: A one-piece diagonal brace, minimum 38x3mm CHS will be fitted in the roll cage hoop, behind the driver's head, within 250mm of the bend, and down to the point where the hoop joins the L/H cage base as per Fig 3 (i). A second brace may be fitted in cruciform. If cruciform type bracing is used, a minimum of 32x3mm CHS may be used.

6. **Seat Back/Shoulder belt Bar**: A 38x3mm CHS mounting bar to be fitted to mount the seat and seat belts, to be positioned so that the belts are anchored a maximum of 300mm from the point at which the shoulder belts come through the back of the seat. Top seat mount to be no further than 75mm lower than this bar.

7. **NASCAR Bars**: On the driver's side, three horizontal bars that will resemble the drawings provided. They are to have a deflection/bend at either end of the bar which allows the Nascar bars to be positioned towards the door skin and placed between front and rear cage legs, evenly spaced between windowsill and roll cage sub-frame. Top NASCAR door bar to be within 50mm of the window opening for all cars registered after 1st July 2015. The centre or bottom horizontal bar may run straight through, from front wheel arch to rear wheel arch, and then have two separate pieces of 38x3mm CHS turning to the NASCAR bar connecting to the roll

cage main hoop, and to the front leg. There will be a minimum of two bars evenly spaced between the front leg, and the rear hoop for each of the openings created by the NASCAR bars, making a minimum of six bars to be fitted. Refer to Fig 3 (i). Door pillar to be notched, NOT removed, to accommodate bar work. (01/07/17)

8. **Door Bars**: Passenger side will have a minimum of two bars fitted between the front leg and the main hoop. One of these must be horizontal at windowsill height. Top NASCAR door bar may be straight or deflect outwards. (01/07/21)

9. **Lower Windscreen/dash bar**: A 38x3mm CHS bar between the front legs must be fitted at top NASCAR bar height. Refer also to front leg options (3). As an option a bar (16.) can be fitted between lower windscreen/dash bar and the front spreader bar.

10. **Centre Windscreen Bar**: A 25x3mm minimum bar, to be fitted at centreline of cage, between roof hoop, and the lower windscreen bar.

11. **Rearward Brace Bars**: Two rearward brace bars minimum 34mm CHS to extend from top rear of main hoop down onto the rear sub frame (approx. 45 degrees). They may form a crucifix and must be attached to the rearward side of the main hoop within 100mm of the centre of the bend.

12. **Foot Protection Bar**: When drivers' feet are forward of the front roll cage leg (bar #3) in race position foot protection is mandatory. See Fig 3 (iii)

    Foot protection bar is to be of 38x3mm CHS minimum and is to attach to the front roll cage leg (bar #3) no lower than 300mm from the roll cage sub frame base (bar #13). To be measured from the top of the foot protection bar to the base of the roll cage sub frame. To protrude forward **as far forward as possible (30/06/26)** toward the front firewall / RHF wheel well and re-attach to the roll cage sub frame base (bar #13) to protect the driver's feet in the event of side intrusion. See Fig 3 (iii) (01/07/21)

    The foot protection bar is to be braced (bar #17) to substantial bar work to the left and is to be a minimum of 25x3mm CHS. This is to prevent the collapse of the foot protection bar in the event of side intrusion. See Fig 3 (i)

    Foot protection area to be completely filled with either 3mm MS or 5mm aluminium plate. See Fig 3 (iii)

    When using a bolt in removable foot protection plate, it is to be attached to the outside of the foot protection bar using a minimum of 4 x 50x50x3mm (square) or 4 x 55x40x6mm (rectangular) MS tags attached no further than 200mm apart with 8mm or 5/16" bolts facing inward, with no protrusions. The larger the foot protection area, the more tags required. Multi-hole or scalloped tags are NOT permitted. (16/09/17)

13. **Sub Frame:** Roll cage legs shall be welded to the top of a sub-frame of 38x3mm CHS, 50x50x5mm angle or 50x50x3mm RHS section running fore and aft. Sub-frame to be securely welded or bolted to the floor pan/sills using at least four 12mm steel bolts through the sub-frame and using 100x100mm plates under the floor.

14. **Spreader Bars:** A minimum of two sub frame spreader bars at roll cage legs, either 38x3mm CHS or 35x35x3mm RHS to be fitted. 200mm is the maximum distance forward or back, from the front leg of roll cage, for fitment of the spreader bar, before a brace is required. No spreader bars that have any deflection shall be allowed if they are under any seating. That is deemed to be any area from the front edge of the seat to the rear edge of the seat base for all seats fitted to the vehicle. (01/07/21)

15. **Quarter Window Bar:** A quarter window bar (bar.15) if required because of excessive rake or a long roll cage, where the "A" pillar bar (bar. 3) is less than 45 degrees from the horizontal must be fitted to both sides and installed from the top Nascar bar to top one third section of the "A" pillar bar, using a minimum of 25x3mm CHS.

    The lower mount point must be aligned with or be within 50mm of the first dropper bar. On the passenger side this will require an additional dropper bar between the top NASCAR bar (bar.7) or the door bar (bar.8)

and the base bar (bar.13) to support the quarter window bar.

16. **Lower Windscreen/ Dash Bar Support:** As an option a bar (16.) can be fitted between lower windscreen/dash bar and the front spreader bar.

17. **Foot Protection Support Bar:** A bar (17) minimum 25x3mm CHS will attach from the foot protection bar at one end, and the other end to bar work to the left.

18. **Dropper Bar:** On the passenger side a 38x3mm CHS bar will be required between the top nascar bar (bar.7) or the door bar (bar.8) and the base bar (bar.13) if the quarter window bar is fitted. (01/07/17)

Windscreen Mesh: Mesh screen to cover entire area from "A" pillar to centre bar and from dash to roof bar.

a) Maximum effective mesh size 50x50 mm mild steel. Mesh gauge 3mm. (16/09/18)
b) Windscreen mesh to be welded or clamped with metal clamps to the roll cage "A" pillar and centre windscreen bar.
c) Minimum of four clamps.
d) Mono cars mesh may be welded to body.

Anti-Spear Plates: 3mm steel or 5mm alloy, (NOT to be lightened by drilling).

a) The anti-spear plates to be fitted to the outside of the NASCAR bars and overlap the edge of the NASCAR bar work. (01/07/17)
b) Recommended 1/3 length between roll cage legs, to be fitted on the driver's side, from base of roll cage to top Nascar bar, forward of the first vertical door dropper bar to the front leg of the roll cage.
c) If using 3mm steel, plate/plates to be fully stitch welded. (01/07/23)
d) If using a single 5mm alloy plate, it must be bolted on using a minimum of 6 – 50x50x3mm (square) or 55x40x6mm (rectangular) mild steel plate tags/plates. (01/07/23)
e) If using 3 individual 5mm alloy plates, they must be bolted on using a minimum of 4 – 50x50x3mm (square) or 55x40x6mm (rectangular) mild steel tags/plates per piece. (01/07/23)
f) Tags/plates to be solid square or rectangular with one hole only for the mounting point. (01/07/23)
g) All alloy plates must be bolted on using a minimum of 8mm or 5/16" high tensile bolts with no protrusions. (01/07/23)

Fig 3. (i) Typical Roll Cage

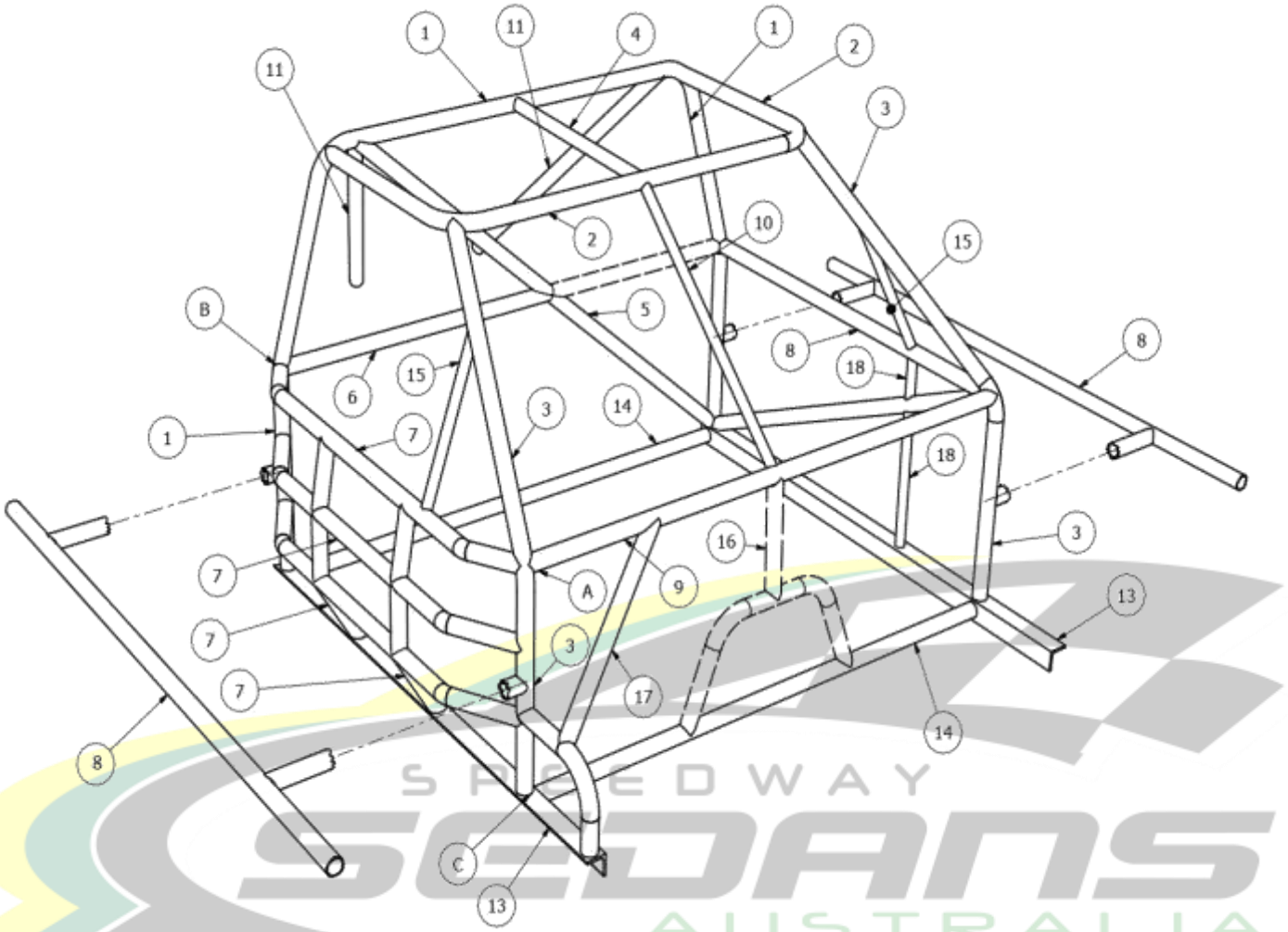

Fig 3 (ii)

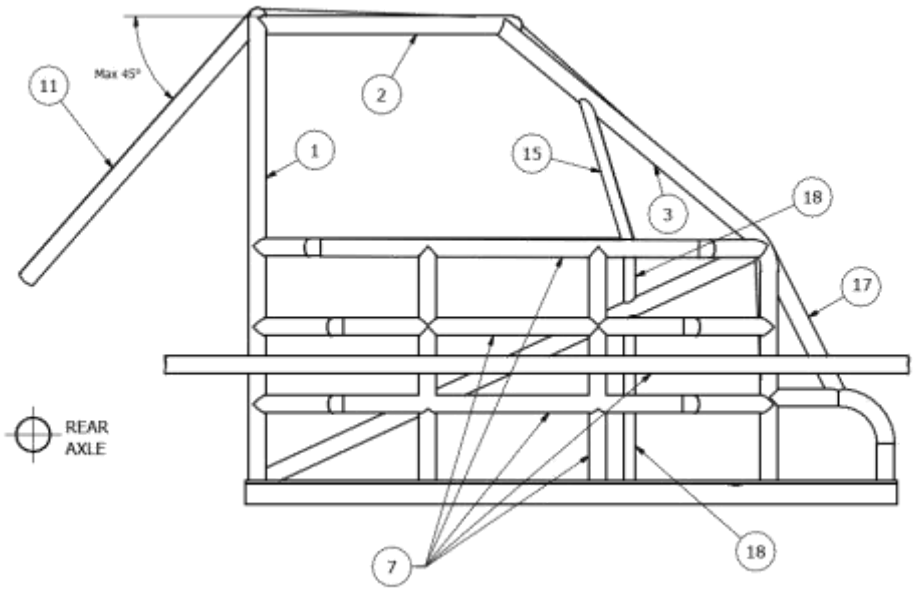

Fig 3 (iii)

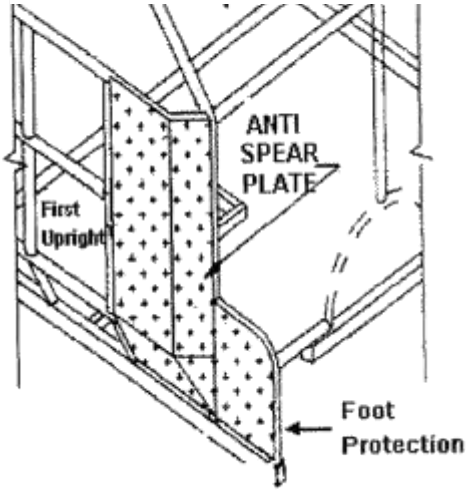

Fig 3 (iv)

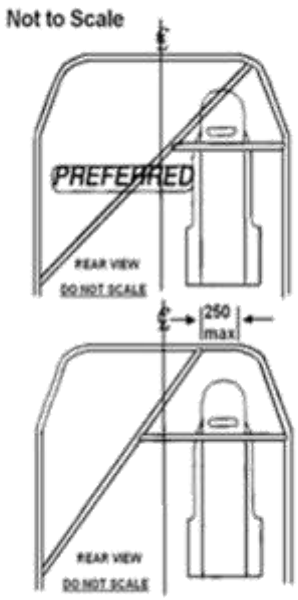

Fig. 6 (iii)

Fig 3a – Alternate Roll Cage Design (24/11/18)



HEAD PLATE:

A minimum of 50mm clearance is required between the helmet, including fresh air intakes and associated fixtures, to any part of the head plate and roll cage when driver is seated and harnessed. (01/07/2020)

All steel or aluminium head plates are to cover in full the opening above the drivers. To extend from roof hoop (bar #2) on the outside to the centre bar (bar #4), front roof hoop (bar #2), to main hoop (bar #1). Cutting off corners or any lightening of any form is NOT permitted. (01/07/23)

a) Head plate to be of 5mm ALUMINIUM ALLOY or 3mm STEEL.
b) The use of 10 of 50x50x3mm (square) or 55x40x6mm (rectangular) MS tags will be required when using a removable Head Plate. (01/07/17)
c) Plate to be mounted, from above, with 10 x 8mm dia. High Tensile bolts with lock nuts/locking devices fitted, 3 each side, 2 front, 2 rear. Heads of bolts to be downwards e.g., no protrusions. (01/07/23)
d) To simplify the removal of an injured driver it is highly recommended that a removable full-size head plate be used: Fig. 4.
e) Plates/tags to be solid square or rectangular with one only hole for the mounting bolt. (01/10/16)

Fig 4 Head Plate

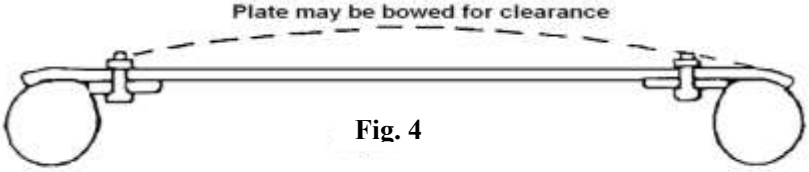

Fig. 4

ALTERNATIVELY

a) A head plate min. 3mm steel must extend from rear roll bar to top windscreen bar and from driver's side outer roof bar to centre roof bar.

b) This plate must be securely welded to these bars with intermittent welding procedure.

Helmet clearance including fresh air intakes and associated fixtures, between roll cage roof/hoop bars for existing vehicles, may raise head plate as per drawing below, to obtain 50mm clearance. (01/07/2020)

Fig. 4(i)

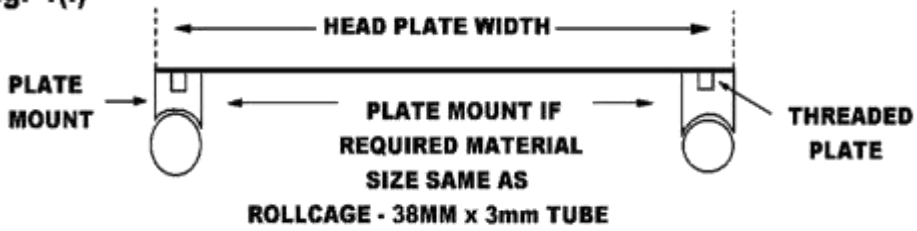

Mounting procedure for raising of head plate (existing cars). 10 stubs 38x3mm tube – stub length is determined by height required to gain 50mm clearance.
Stubs to be end capped and threaded for mounting purposes.

3. BUMPER BARS & OPTIONAL EXTERNAL BARWORK

a) From 1st July 2016 all Junior Sedans produced with plastic bumper/stone trays will be required to have the original fitted or as per subsection c).

b) OEM type steel bumper bars NOT permitted, must be replaced with maximum 38x3mm CHS. Vehicles with plastic bumpers must have the bar work behind the bumper.

c) Plastic bumpers can either be original for vehicle or one of similar size and profile made from the original materials or a fibreglass replica. Vehicles with plastic / fibreglass bumpers are not required to have slip / crush joints as listed in Figure 10 Options 1 & 2. (01/07/23)

d) is relevant for Datsun's and Toyota's only. Original or replica stone tray must be fitted, may be of original material (metal), fibreglass or race car plastic replica only.

e) Bumper covers must be fitted with round head bolts aluminium rubbing strip 40x3mm may be fitted between bolts to support bumper cover.

f) Any front mud protection guards under cars to protect engine or suspension components from mud and dirt must not be lower than 150mm from ground level. Not to attach to front bumper.

g) Bumpers to be securely mounted in original position using supports of a minimum size, 100mm from rear of bumper tube. The maximum gap between rear of boot panel and rear bumper is 100mm Maximum, support size, 38x3mm CHS. I.e., Gussets are not to be used. For purposes of maintaining 100mm clearance of any bracing from rear of bumper tubes; rear of bumper tubes are determined as the inner side of the tubes of both front and rear bumpers. (14/09/19)

h) Bumper or supports are not to tie to under-guard bar work.

i) Non-OEM skirts are NOT to be fitted to bottom of bumpers. (01/07/23)

j) FRONT bumper maximum return 300mm, minimum 100mm, by max. 38x3mm CHS.
   (i) Bumpers are to remain hollow.
   (ii) Corners and ends of front and rear bumpers to be radius formed, 100mm minimum.
   (iii) Maximum of four mounting points on each bumper bar.
   (iv) Returns and bumpers to be flush fitting with the body, within 25mm.

(v) Anti-hook-up bars from returns of front and rear bumpers to be extended into the stay bars.

k) REAR only: Returns of rear bumper may be extended as a skid rail against outside of the body between the bumper and wheel arch, and then extend inward to the 'chassis rails.

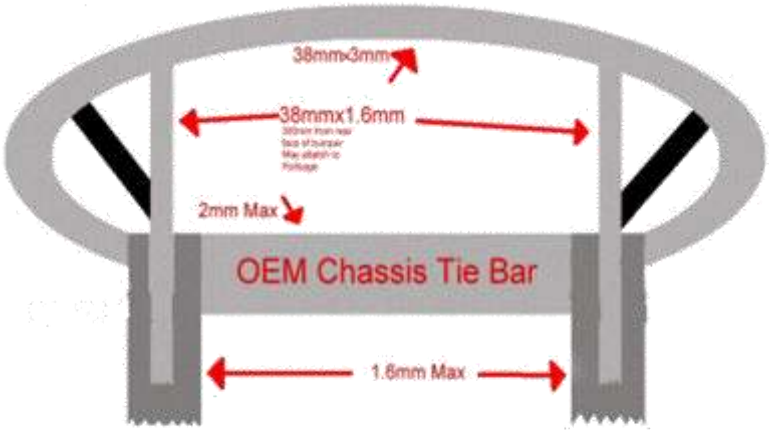

Fig. 10—Option 1
Bumper supports forward of the OEM radiator support panel position to be maximum of 1.6mm x 38mm max.

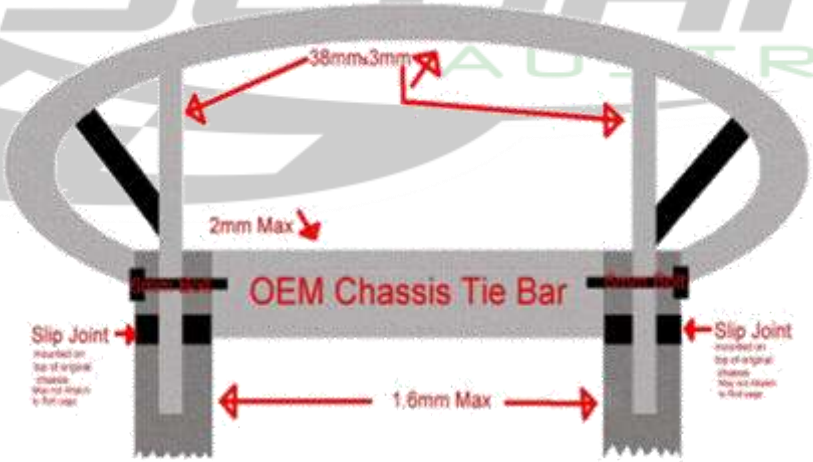

Fig. 10—Option 2
Bumper supports using 38mm x 3mm tubing maximum must use a stepped slip joint as per diagram using 1 x 5/16 or 8mm bolt each side.

l) Corner plates on top edges of front or rear bumper NOT permitted. (01/07/23)

m) **REAR OVERRIDE BAR**. An override bar may be used.

Constructed of maximum 25x3mm CHS – it shall be no wider than the boot panel and shall be mounted centrally on the bumper bar at no more than four points, be VERTICAL and be max. 100mm high. Fig 10 (i). Brace bars are not to be used. Fig 10 (i)

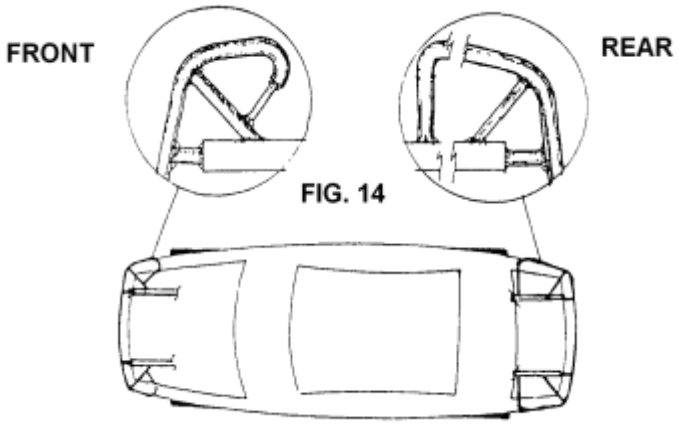

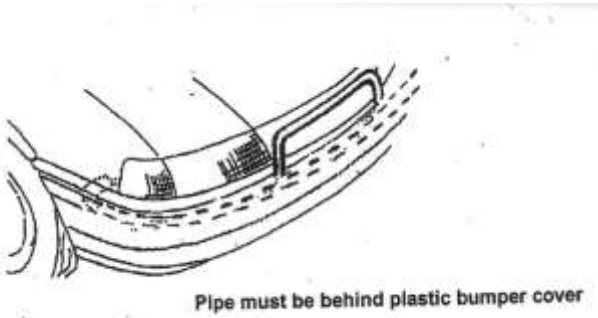

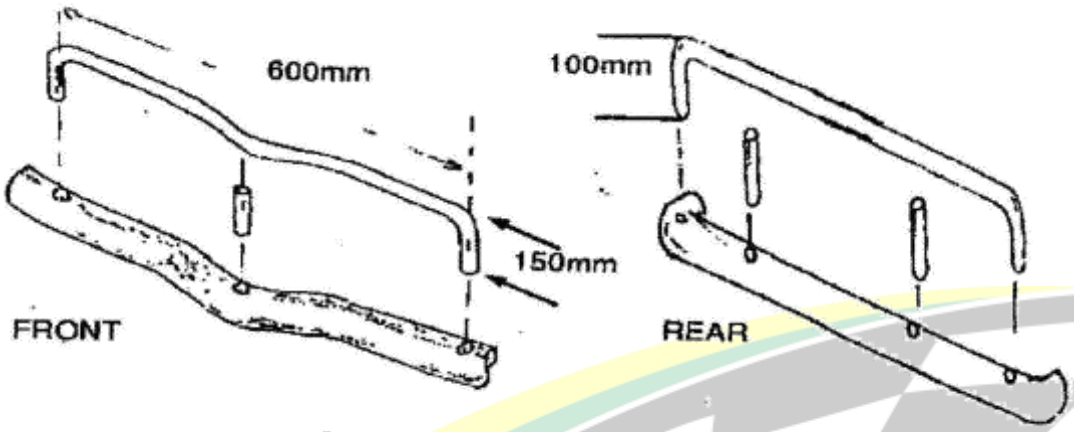

n) **FRONT OVERRIDE BAR**. An override bar may be used.
Constructed of maximum 25x3mm CHS maximum 600mm long, 150mm high and mounted centrally on top of bumper at three points only, i.e., it may have a centre support. Fig 10 (i)

o) **TOWING STRAPS – Optional – (01/07/2020)**

(i) Tow straps are to be of wire rope cable or nylon webbing.
(ii) Tow straps can be attached to the front and rear override bars.
(iii) Tow straps can be accessible through a hole in the front and rear bumpers.
(iv) Tow straps are recommended to allow a disabled vehicle to be towed.

p) **SKID RAILS (01/07/2020)**

Skid Rails are an optional fitment on an SSA Junior Sedan. They are to be attached between front and rear wheel arches. Skid rails on rear quarter panels behind rear wheels are NOT permitted.

GENERAL

(i) Skid rails are to be either 25x25x3mm mild steel RHS or alternatively 50x12mm nylon or urethane. Nylon or urethane option will be attached as per option 1.
(ii) Skid rail to be attached to body and inner skid rail with a minimum of 4 evenly spaced attachment points.
(iii) Inner skid rail to be a minimum of 25x25x3mm mild steel RHS or 25x3mm CHS and both ends must return to bar work using a minimum of 3mm thick material. This applies whether an outer skid rail is used or not. Any barwork in the cabin area outside of the main roll cage be that forward or rearward of the roll cage that projects toward the door will be classed as inner skid rail. (01/07/23)
(iv) Skid rail attachment bolts are to be of round head, cup head, cap screw type hardware and must be a minimum of 8mm.
(v) Attachment bolt heads must be external to outer skid rail wall and must insert horizontally through both outer rail and inner rail support, clamping together with door panel between the two rails.

Option 1

(i) Outer skid rail ends must be closed and taper to 45º to not become a tear point.
(ii) Attachment bolts at each end of outer rail must be within 50mm from each end of rail.

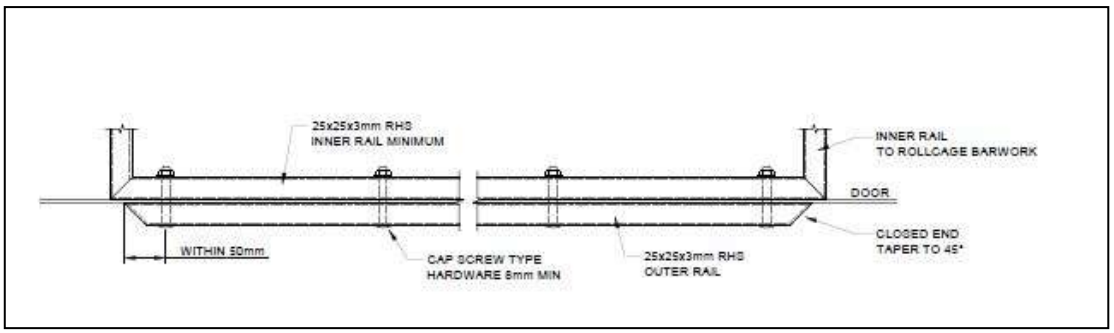

Option 2

(i) Outer skid rail ends must have a radius formed end as not become a tear point.
(ii) Outer radiused ends must return through a hole in door panel and be securely attached to a receptacle type spigot on roll cage or bar work.
(iii) These two radiused ends will be classed as two attachment points.
(iv) An additional two attachment points of outer rail must be as per specification listed in GENERAL above.

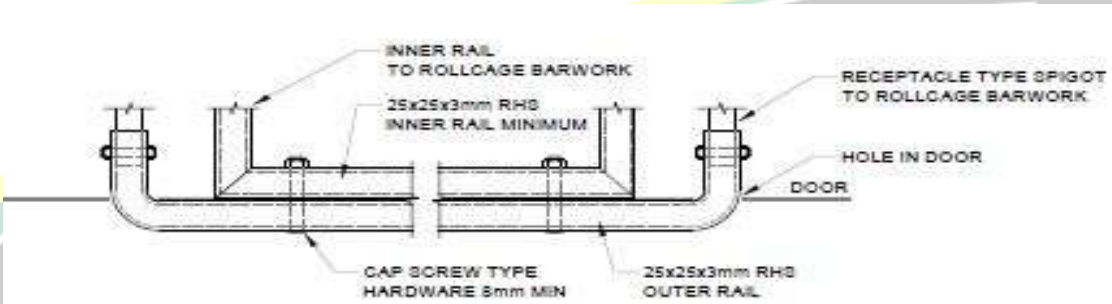

4. ENGINE

ENGINE – All of the components making the engine function, meaning complete engine, including rocker covers, excluding exhaust.

a) Engine to be mounted with rear face of the engine block in the original position.
b) Engine offset is not permitted.
c) Engine Sealing is Compulsory.
d) SSA Inc use triplicate copy engine sealing books that are numbered, top copy (white) to car/engine owner, 2nd copy (blue) to state office, 3rd copy (green) to remain in the book.
e) All engines are to be sealed to take part in Practice or Race Meetings.
f) Engine Identification tag is to be ORANGE – to be attached to timing cover seal using wire looped through engine seal. (01/07/17)
g) Seals to be fitted: 1 x sump, 1 x timing cover and 1 x cylinder head.
h) The car owner is to always have a copy of the engine sealing and daylight inspection forms with the logbook.
i) ECU must be sealed, and the completed sealing form is to be always kept with the Logbook. See below in 4.1.1 a) for the process. (01/07/16)

4.1 – EFI CONFIGURATION

All items within this EFI section are subject to review at any time to maintain parity across the division.

There is no longer a requirement to give Notice of Intention to Build an EFI Junior Sedan – please refer to the list of approved makes and models in Section 18 Table 1 prior to commencing to build your EFI Junior Sedan as these are the only permitted makes and models at this time. (01/01/21)

If a restrictor plate is required, they will be available through the SSA Inc National Office. It will be stamped with

a specific number and identification mark. Method of fitment will be tacked or sealed in the air intake of the throttle body (so it cannot be easily removed). The throttle body/plate bolts will have a seal fitted (like the engine seals)

Approved Makes and Models (updated 14/09/19)

- Daihatsu Charade 1987-92 1993-96 G102 and G200 Range – 1300 OHC 4 Cylinder 16 valve SOHC
- Daihatsu Charade 1993-96-00 G200 Range as per OEM – 1500 OHC 4 Cylinder 16 valve SOHC
- Hyundai Excel 1989-95 X2 – 1500 SOHC
- Hyundai Excel 1995-97 X3 – 1500 SOHC
- Mitsubishi Lancer 1996-2001 (CE) – 1500 SOHC (16/09/17)
- **Mitsubishi Mirage 1996-02/2004 – 1500 SOHC (18/10/25)**

4.1.1 E.F.I. is permitted to use with the following restrictions. Effective 1st July 2015

a) SSA Inc. approved and sealed ECU. All computers are to be sealed by Cool Drive Auto Parts only. (See below for details for Cool Drive Auto Parts). SSA Inc reserves the right to exchange, or swap sealed and tested computers supplied from Cool Drive Auto Parts at any time during a race meeting. The ECU must have legible compliant identification on the unit to be deemed sealed. (01/11/17)

The only authorised branch for SSA Inc ECU sealing is: Attention: Repair Centre
Cooldrive Auto Parts, 9 Boeing Place, CABOOLTURE QLD 4510
Phone: **07 3481 5080** Email: speedway@cooldrive.com.au
Website: www.cooldrive.com.au
Note: new address since 1st November 2021

There is an ECU/Computer Sealing Form to be completed and forwarded along with your computer when sending for sealing – the form is able to be downloaded Click Here ECU to be sent directly to Cool Drive.

The competitor is responsible for the downloading of the ECU Sealing form and forwarding along with the ECU to be sealed. It will be completed by Cool Drive Distribution and a copy returned with your ECU. Speedway Sedans Australia have introduced a Seal Sticker which will be attached to all sealed ECU's – this will be placed on the sealed unit by Cool Drive Auto Parts – removal or tampering of this sticker will result in the need for the unit to be resealed.

From 01.07.17 all ECU's to be resealed with the SSA Inc Seal sticker and an ECU Sealing Sheet placed in the Logbook (01/07/16)

Note – to enable Cool Drive to test and seal your Lancer ECU you need to send the original key, key reader and immobiliser when sending the ECU for sealing. However, if the original key, key reader, and immobiliser are not available contact Cool Drive direct PRIOR to sending the ECU for sealing. (01/07/18)

For inspection purposes ECU unit MUST be mounted in a location that ECU can be removed for inspection during pre- and post-race scrutineering by the scrutineer. Removal to be completed by the car owner. (01/07/23)

b) Camshafts are to remain STD as per manufacturer's **specifications for Make, Model and Series used**. No variable cam timing (VCT) or derivatives. **No billet camshafts.** The camshaft specification may be changed in the future by SSA if required to maintain parity between all cars.

c) All approved makes and models must use original standard computer, DFI module and coil packs.

d) Standard memcal only to be used for make / model and series of car.

e) Standard inlet manifold and injectors for model of car. No High output or performance derivative of the make or model allowed.

f) Heads are to remain standard with facing as per current rule book. The original casting number on the head must remain.

Minimum Head Thickness

Mitsubishi 4G15 106.0mm

Hyundai 4GEK 73.0mm

Daihatsu 1300 & 1500 92.00mm (30.06.26)

g) Standard exhaust manifold base model only remainder of exhaust as per current junior rule book.

h) All standard sensors must be fitted and be operating including fuel pressure regulator except oxygen sensor and coolant sensor.

i) All engine components must be fitted (air cleaners etc).

j) Header tanks for fuel pumps not allowed & no surge tank or cooling chambers.

k) No adjustable fuel pressure regulators.
l) Rev limiter to remain OEM.

m) If a restrictor plate is required, they will be obtained through the approved SSA Inc National Office, it will be stamped with a specific number and identification mark. Method of fitment will be tacked or sealed in the air intake of the throttle body (so it cannot be easily removed). The throttle body/plate bolts will have a seal fitted (like the engine seals).

n) Engine oil pickup gauze may be replaced with larger size (not so fine) gauze. (01/07/18)

4.1.2 BOTTOM END ROTATING ASSEMBLIES

Engines are allowed no more than 0.040 overbore and 0.060 machined off deck height. Offset or angle grinding of block to head mating surface is not permitted.

a) All components in bottom end of engine MUST be OEM/STD for engine configuration being used.

b) OEM forced induction bottom end components are NOT permitted.

c) Removal or addition of material from any part of OEM components to aid in engine balancing is NOT permitted. The ONLY tolerance given is OEM holes in Crankshaft as supplied by manufacturer.

d) Piston pin height MUST be of an OEM measurement for engine being used. Custom NON OEM replacement piston pin heights are NOT permitted.

e) Pistons are to be of OEM design for engine being used, i.e. dish crown to remain dish crown, flat top to remain flat top.

f) Machining for valve relief or Lightening of Pistons is NOT permitted.

g) OEM replacement forged or high pressure cast pistons are not permitted. (30.06.26)

4.1.3 Approved *EFI specific items*

The following are specific items relating ONLY to models produced with OEM Fuel injection: -

a) Standard size OEM injectors are to be used for make and model of car. Inside diameter not to be increased or decreased.

b) Any passenger car fuel pump permitted up to equivalent of Bosch 044 pump allowed. Fuel pump must be fitted with engine monitoring relay to stop fuel pump running when engine stops. Fuel pumps to be mounted in the boot area. Fuel pump to be external only. (16/09/17)

c) A flexible fuel line section must be fitted within 75mm of fuel tank and all fuel lines to be securely fixed in position.

d) Barbed fitting of the correct size must be used in conjunction with screw type clamps when connecting flexible fuel line. (Genuine SAE R6 fittings and hose exempt)

e) Neoprene, reinforced plastic or "black fuel line" may be used. OEM type Bundy steel tubing may be used through the car or under the car.

f) Flexible fuel line can pass through the cabin area, must be one piece.

g) High pressure fuel lines are to use high pressure hose and fittings.

h) If a return line is used, it must be fitted with a one-way valve, at the fuel tank.

i) Computer control units are restricted. If OEM unit includes ignition, they must perform this function.

j) Size of throttle body to be OEM type and size for model being used and to be standard in INTERNAL and external appearance. (No machining or alteration permitted). IF REQUIRED An SSA Inc approved restrictor to be fitted to the air intake side of the butterfly to reduce horsepower of engine to maintain parity. Regular checks on correct sizing will be carried out.

k) Checks will be on fuel and OEM equipment. Any modification to throttle body or butterfly is not permitted other than to insert restrictor/plate.

l) Non-OEM fuel injection not permitted. Forced induction not permitted.

m) Return springs must be fitted to each butterfly shaft (inbuilt springs accepted).

n) Air filters and intake tubes are NOT restricted. (01/07/2024)

o) ADDITIVES – the introduction into the combustion chamber/s of additives, either in solid, liquid or gaseous form, (e.g., nitrous oxide) by any means is expressly forbidden.

4.2 ENGINE: CARBURETOR CONFIGURATION

a) In the engine bay one should see the basic items as in the road car, e.g., ignition, coil and distributor, fuel pump, air cleaner and charging system, all in use on the engine.

If a standard unmodified cylinder head fits the engine block without modification it can be used. Inlet manifold and exhaust manifold must bolt on without any modification to either head or manifold. Your original carburettor must also fit without modification to manifold or carburettor.

b) Engine to be maximum 4 cylinders reciprocating ONLY. Maximum capacity 1200cc rear wheel drive, 1100cc front wheel drive and 1000cc OHC. Rotary, turbo, or supercharged engines are NOT permitted. Mechanical fuel injection systems are not permitted.
Others, not included above, must be approved by the National Technical Committee prior to construction.

c) Engine to be the type and size for the model.
Any doubts about engine sizes etc., will revert to Manufacturer's 'base model' of the registered series.

d) Engines will be inspected on the basis that all parts used in/on all engines must comply with the specifications/dimensions specified in the original (O.E.M.) manual produced by the manufacturer for the standard engine except for the listed permitted modifications.

The Owner/Driver is responsible to prove the above and produce information, when necessary, to validate the claim.

e) Refer, Australian Standards 'AS 4182 – 1994 Code of Practice for Engine Reconditioning Standards'. ENGINE BALANCING: The balancing of any engine componentry or removal of any balance shaft in this class is STRICTLY PROHIBITED. The only tolerances allowed are the drill holes in the crankshaft as done by the manufacturer (O.E.M.). The Conrods cannot have any metal removed or polished. The pistons cannot be machined or lightened. Copper head gaskets are not permitted. Head gaskets to be standard replacement parts.

f) A standard engine is allowed not more than .060" overbore and .060" for head facing.

g) Engine Block: The maximum allowable cylinder sleeves to be fitted to an engine block are two in total.

h) OFFSET boring of bearings and/or cylinders, offset grinding of crankshaft or angled facing of head to block surfaces is prohibited.

i) ENGINE to be of standard stroke, con-rods, and crankshaft to remain OEM parts for the engine model; the fitting of other model, make or specially built cranks and/or rods not permitted; port sizes and casting finish as for base model; standard flywheel (not lightened). Flat top pistons allowed. No forged or racing pistons. Some Charade pistons will protrude above engine block.

j) CAMSHAFT is not restricted. The use of multi keyway timing gears or recut of OEM keyway or dowel is allowed. Offset key may be used. No other gears or modification allowed. Camshaft followers to remain hydraulic if as per base model.

The use of performance parts in the valve train is PROHIBITED, e.g., Roller rockers, cam followers. Adjustable or variable cam timing gears are not permitted and can only be standard O.E.M equipment gears. No variable adjustable cam gears allowed.

k) Engine sump to be visually standard externally.

l) Distributor must be OEM for make and model, both internally and externally and have all original function. Advanced weights must be OEM. Advance weights and vacuum advance unit must be OEM, vacuum hoses are optional. Upon removal of the distributor cap, by holding and moving the rotor button it must have advance and retard movement. The use of an OEM standard replacement electronic ignition is permitted. (01/07/18)

m) No double valve springs.

n) No cabin mounted engine breathers.

o) If resilient engine mounts are used, the mount MUST be restrained with minimum 6mm cable or 6mm chain to be as short as possible. (01/07/23).

p) Twin outlet exhaust manifolds for Datsun 1200 permitted.

4.2.1 – CARBURETOR

a), Not more than one carburettor as originally fitted.

b) For all cars, the carburettor is to be OEM standard, including venturi size, except that an adjustable main jet may be used, float bowl position relative to engine, as in original vehicle.

c) The choke butterfly and shaft may be removed**.**

d) A return spring MUST be fitted to each throttle shaft of the carburettor (in-built springs acceptable).

e) That any type of air cleaner may be used. No ducting to air filter or carburettor unless O.E.M.

f) That any use of upper Cylinder lubricant via carburetor or vacuum system is non-compliant. Any vehicle found with these types of systems will be deemed non-compliant. (01/07/2020)

g) Vacuum hoses to carburettor fitment not restricted.

h) The use of OEM carburettor to manifold heatshield only is permitted.

5. BATTERY AND ELECTRICAL SYSTEM

a) Battery to be securely mounted in a box or steel frame secured to roll cage or bar-work.

b) The battery and terminals to be covered with non-conductive cover if the battery is in cabin area to prevent spillage.

c) Battery mounted within the cabin area to be held down by an angle iron mild steel or aluminum frame MINIMUM 25x25x3mm both top and bottom. Refer to Fig 8. (01/07/23)

d) Regardless of the location, the battery will be mounted with a minimum of 2 x 8mm / 5/16" bolts or rods. (01/07/23)

e) The use of any battery over the size of N70ZZ is not allowed and one only permitted. (01/07/16)

f) Suitable grommets must be fitted where electrical cables pass through metal firewalls.

g) At the commencement of a meeting, the car must be capable of starting with a starter motor.

h) Switches: Ignition switch and electrical fuel pump switch, if fitted, must be grouped together, and be clearly marked.

i) An engine 'KILL' switch, suitably marked for method of operation should be of lever/twist type, located centrally and forward of the windscreen mesh. This switch must isolate the battery, and any other electrical item. E-stop type switches that utilise a rotating release function are permitted and are highly recommended. (12/01/24)



j) Electrical switches NOT to be mounted through the floor.

k) Electrical wiring is not to be attached to the fuel lines.

l) All electric fuel pumps to be controlled by an engine monitoring relay, to stop fuel pump running when engine stops. (EFI models only).

m) The use of data logging dashes be permitted. Traction control is STRICTLY PROHIBITED. (01/07/21)

BATTERY CLAMP/HOLD DOWN FRAME

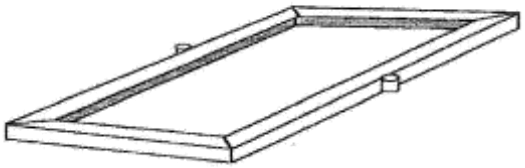

FRAME: 25 X 25 X 3mm ANGLE IRON

6. EXHAUST SYSTEM

a) Exhausts must be within local noise level requirements. Recommended 95 dba.

b) Exhaust manifold to be OEM standard. Original casting marks must be visible. No modification to any part of the OEM standard manifold is allowed. Refer to photos in Section 19. (31/10/18)

c) Remainder of the exhaust system is free, if it has not more than one outlet pipe, it is vented to the side or the rear of the vehicle behind the driver and does not protrude beyond the body line. Fig. 9

d) Internally ducted exhaust system, if used, shall vent through the body, no higher than 100mm above the door sill panel, and to finish flush with the door panel.

e) Driver to be suitably insulated from exhaust system.

f) Insulation and firewall sheeting not to exceed 150mm above the drive shaft tunnel. Sheeting to cover exhaust within 50mm of exhaust, or oil cooler hoses. No other extra sheeting allowed in cabin area.

g) If exhaust system is under floor, safety chains will be fitted to the front and the rear of the exhaust pipes and attached securely to the floor pan or sub-frame.

h) The muffler/s must be securely attached to the vehicle.

i) EFI Charades 1.3 and 1.5 litre – CAT must be bolted direct to manifold – the interior of CAT can be removed. (01/07/19)

Fig. 9

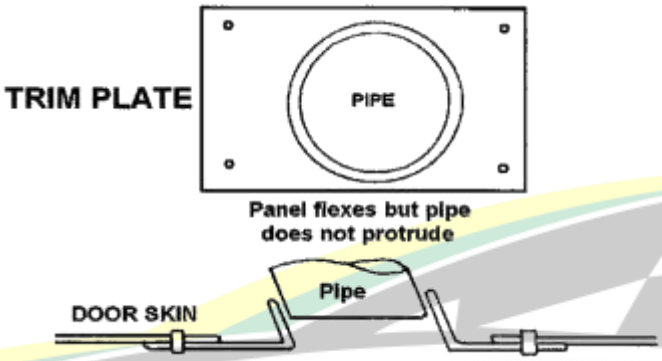

7. COOLING SYSTEM:

a) Radiator may be changed and/or relocated.

b) All radiator hoses to be of fabric reinforced material, plain molded rubber hoses not permitted.

c) Cooling system to have a manual pressure relief tap/cap fitted to the top tank of the radiator to release pressure before loosening or removing radiator cap. Tap to be fitted with hose to direct steam to ground. Push button pressure relief cap not permitted. Lever vent type may be used.

d) The Radiator may be mounted inside the cabin, if it is mounted as low as possible in the rear of the vehicle, and suitably isolated from the driver. The upper half of the rear window opening MUST NOT be obscured by the radiator.

e) Radiator ducting shroud, if used, to be a maximum of 600mm forward of the radiator and must not obstruct more than half the rear window height.

f) Cabin mounted radiators – (01/07/2020)
   (i) that are of a crimped-on plastic tank or Copper soldered construction MUST have BOTH tanks covered to protect driver and others in event of tank becoming dislodged or damaged.
   ii) Proprietary or custom fabricated radiators that are of Aluminum construction that have tanks TIG welded onto core, e.g., AFCO, KENCO, KEYSER, PWR etc DO NOT require tanks to be covered.
   iii) ALL radiators MUST have a radiator cap completely covered.
   iv) Water spray bars or jets are NOT permitted.

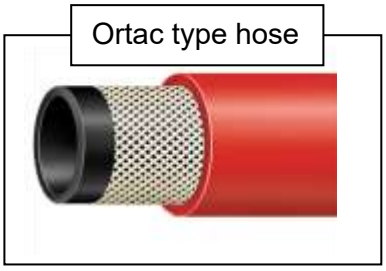

g) Pipes leading to the radiator are to be one of the following (01/07/2020)
- steel,
- aluminum,
- copper material,
- Nonconductive reinforced Ortac type hose,
- PTFE Hose.

All cabin internal pipes are to be ducted or lagged with suitable material.

Stainless steel externally braided hose is accepted e.g., Earls, Speedflow, ProFlow etc that utilise the correct JIC or A/N Dash type fittings that have been professionally installed as per correct fluid transfer practice are not required to be ducted or lagged.

h) Pipe to be securely mounted on the inside of the roll cage.

i) Hoses to be as short as possible and fitted to the radiator from the rear side.
j) Cabin mounted fans to have a shroud or suitable guard.

k) All header tanks, hoses, and caps in cabin area to be covered as per radiator tanks and hoses. Must be mounted below half window height.

l) No electric water pumps permitted.

m) In a car with a rear firewall – Rear radiator and shrouding to be rearward of Roll Cage main hoop mounted fully in the rear cabin area. (01/07/19)

n) In a car with NO rear firewall – Rear radiator and shrouding to be rearward of Roll Cage main hoop mounted fully in the rear cabin area and not further back than the front edge of the rear suspension towers. (01/07/19)

8. TRANSMISSION/DRIVELINE/CLUTCH(30/06/2026):

a) Gearbox and diff housing to remain standard OEM for make and model. Not Borg Warner to Borg Warner i.e., Corolla must use Corolla diff housing. Ratios are free if it fits in correct housings. All OEM gears must be operational. Rear axle centre line to be in OEM position.

Gear box to be model to model – example – Charade to Charade; Excel to Excel; Lancer to Lancer; Corolla to Corolla; Sunny to Sunny; (16/09/17)

b) REAR WHEEL DRIVE CARS – tail shaft/s must be fitted with 360º hoops at front and rear. (01/07/20)
(i) Tail shaft loops - steel strap minimum 40x3mm or 6mm chain or 6mm wire cable to be securely fitted around the front and rear of tail shaft within 150mm of universal joints to prevent the tail shaft and/or shafts dropping in an event of breakage. The top part of loop to be minimum 40x3mm FMS welded or bolted to floor pan/tunnel on either top or bottom. (01/07/2020)
(ii) If wire cable/chain is used the top/upper section (180º) part of the loop to have minimum 40x3mm FMS welded or bolted to floor pan/tunnel on either top or bottom. FMS to be one piece from side to side at points that cable passes through floor including FMS. The wire cable/chain is to be securely on the 40x3mm FMS. (01/07/2021)
(iii) If there is a joint in the middle of the tail shaft a third tail shaft loop will be required. (01/07/21)

c) Scatter shield: A scatter shield must also be fitted: minimum 3mm steel or 5mm alloy minimum 150mm wide. It must cover the upper 180 degree of the bell housing and be securely attached to protect the driver's feet and legs from a clutch explosion. Front wheel drive cars must cover 180 degrees to the rear side of the bell housing or attached to the front firewall immediately behind the flywheel.

d) The differential MUST be locked. Differential pinion angle to remain O.E.M. standard for make and model.

e) REAR AXLE BEARING RETAINING RINGS: A new retaining ring must be fitted at replacement of bearing or axle. Ring must be an interference fit with the axle.

When in place the retaining ring is to be tack welded to the axle using MIG or a small diameter low hydrogen rod on low amperage.

FAILURE TO OBSERVE THIS PROCEDURE WILL INCUR A PENALTY ESPECIALLY IF AN AXLE IS DISLODGED. (SAFETY DECLARATION)

f) OEM needle roller bearings in Daihatsu Charade gear boxes may be replaced with an internal race bush. Part number #ir32x37x30ina as per transmission reconditioners general practice. Refer to image (01/07/2020)



g) Flywheel weights and thickness EFI only

Mitsubishi Weight 6.3KG Minimum Thickness 28.6mm

Hyundai Weight 6.3KG Minimum Thickness 30.0mm

Daihatsu Weight 6.1KG Minimum Thickness 25.5mm (30.06.26)

h) Clutch Assembly to be of the standard replacement for the model being used.(30.06.26)

9. STEERING:

Original for year, make, model and body type, must be used.

a) Must be in good condition. Steering joints to have locking devices fitted. i.e., split pinned, lock nut etc (01/07/23)

b) Wire spoke or wood rim steering wheels not permitted.

c) Original or fabricated steering shaft must pass through a loop of 12mm diameter steel rod or self-aligning bearing welded or bolted to the roll-cage dash bar. (01/07/25)

d) Hub of steering wheel to be padded with dense resilient foam and covered.

e) To reduce thumb and wrist injuries, the use of “PAW SAVER” type disc steering wheel is permitted.

f) Quick release steering wheels are mandatory – effective 01 July 2019.

g) Modifications to Steering: No quick steer or reduction units allowed. O.E.M. only.

h) Steering, from lock to lock to remain O.E.M for make and model.

i) Pedal position must remain in original position. Except Accelerator pedal.

j) Pedals may be extended. No second set of pedals to push on the first set of pedals.

k) Power steering is only permitted in EFI cars that came out with it.

10. SUSPENSION

An SSA Junior Sedan race car must use a complete metal body with suspension mounting points in original position and being used.

Suspension mounting points are defined as.

(i) Mounting points of suspension arm – either end.
(ii) Strut - either end.
(iii) Shock absorber – either end.
(iv) Springs – either end.

a) All arms, rods, struts, spring shackles must remain standard and function as manufactured as per the manufacturer for make/model/series and body variant being used unless otherwise specified. (01/07/2020)
   (i) Sway bar is optional. If fitted Sway Bar fitment to be open. (01/07/25)

b) Shock Absorbers/Strut Inserts: (01/07/2020)

   (i) All cars may change shock absorbers/inserts to aid handling and stability. OEM or OEM replacement units ONLY.
      - External adjustment of shock absorbers/inserts are NOT permitted.
      - Remote or external canister type shock absorbers/inserts, OEM replacement or otherwise are NOT permitted.
      - Increasing or decreasing of gas pressure via a Schrader valve attached to shock absorbers/inserts OEM replacement or otherwise is NOT permitted.
   (ii) No shock absorber or McPherson Strut insert is to have the capacity to be adjusted whilst in situ and mounted in car.
   (iii) OEM replacement shock absorbers for make model and series of car are permitted. E.g., Koni and Bilstein
      - Competition or rod ended racing type shock absorbers such as AFCO, PRO, FOX, GENESIS etc are NOT permitted.
   (iv) OEM Struts and OEM replacement struts must be for vehicle make, model and series of car being used ONLY, be listed in an automotive parts catalogue and be readily available from an automotive parts supplier. Fabricated non-OEM strut tubes are NOT permitted.
   (v) Mounting ends on shock absorbers and struts must remain OEM. i.e., pin type mount to remain pin type.
   (vi) OEM spindle clevis clamps on OEM strut tubes must remain completely OEM and cannot be modified or altered in any way. i.e., elongation or enlargement of bolt holes is NOT permitted.
   (vii) Fitment of Front and Rear Strut inserts:
   All inserts must be installed as per the manufacturer instruction of insert, installation method cannot be modified or altered.
   The top swaged section of strut tube may be removed, and the insert installed, with the insert attached via bolt through the base of strut tube or retained by a gland nut and threaded collar supplied with insert and welded to top of remaining OEM tube.

c) Coil Spring to remain Coil Spring, Leaf Spring to remain Leaf Spring.
   (i) Coil spring spacers are permitted to fit above the installed coil spring.
   (ii) If using small diameter coil spring, the OEM perch must remain completely OEM.
   (iii) Coil spring is to be retained. (01/07/2024)

d) Adjustable coil-spring perches on front or rear strut tubes OEM or otherwise are NOT permitted. (01/07/2020)

e) A strut brace between front towers is permitted.

f) Adjustable suspension arms, Panhard rod/watts linkage's etc are not to be used.

g) NO COILOVERS, AIR SHOCKS or PUMP-UP SHOCKERS ETC

h) No lowering blocks allowed.

i) The use of front and rear aftermarket caster and/or camber kits/adjusters are permitted in the front of the vehicle only. To be fitted without any modification. Multiple adjusters can be used. OEM/STD adjustment only is permitted in the rear of the vehicle (30/06/26)

j) It is highly recommended that the rear stub axles on Mitsubishi Lancer and Mirage – where the rear stub axle attaches to the rear swing arm be reinforced. Recommended method as per the images below. (01/07/2020)











11. WHEEL TRACK

Wheel Track to be within 50mm of standard measurement (absolute).
Measured from outside of one rim to the outside of the opposite rim. (Wheel/tyre measured at stub axle height, and averaged front and back of the rim). Measurements (Table 8) include 160mm for measurement (155mm rim width and 5mm rim thickness) to accommodate SSA Wheel track measuring tool.

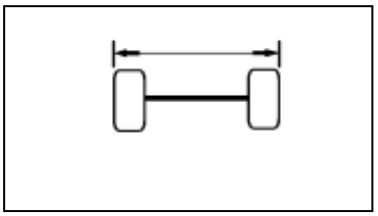

12. WHEELBASE

Original, within 1% ABSOLUTE.

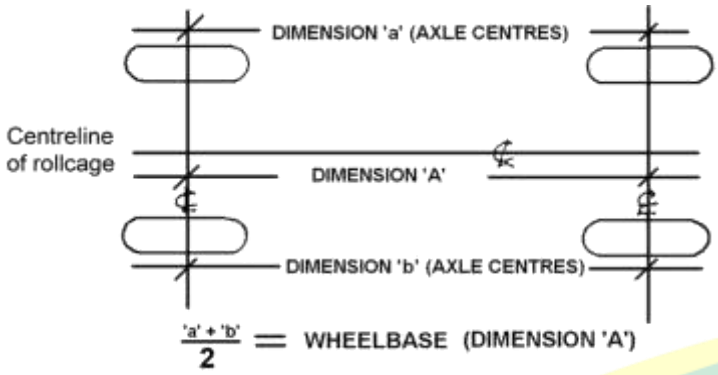

Method of measuring wheelbase shall be with each front wheel pointing straight ahead. Measure distance from front axle centre to rear axle centre on each side of vehicle. Add dimensions for left and right and divide by 2, allowable tolerance is +/- 1%.

13. WHEELS

a) All wheels must be steel or alloy construction.

b) Alloy or Mag wheels may be used but must be of one-piece construction. Correct matching nuts must be used.

c) OEM steel rim centres may be modified using steel 6” outers (blanks).

d) Rim diameter to be max. 14”. Max rim width 155mm (6”) Fig 11. Custom made wheels not permitted. (01/07/23)

e) No bead locks.

f) Wheel covers (discs that cover the wheel) are not permitted.

g) Wheel spacers may be used. Maximum of 50mm spacer/s per wheel. (01/07/19)

h) Wheel nuts/studs are not to protrude past the outer face of the wheel when measured from bead to bead. (01/07/23).

Fig 11

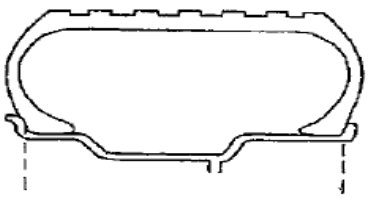

14. TYRES: (01/07/2020)

GENERAL

a) Tyres be in good condition.
b) All manufacturer's markings to be visible on side wall.
c) Grooving of tyres is permitted.
d) Safety inner tubes permitted.
e) Any type of lubrication (Grease or oil etc) is not permitted on tyre side walls.
f) Tyre shine type cosmetic products are permitted for application to side wall only.
g) The compliance of any permitted tyre can be reviewed at any time.

PERMITTED TYRES

a) Road legal radial tyres
b) Maximum side wall marking width 185.
c) Maximum speed rating H
d) Tread wear rating of 220 and above as marked on side wall. Tyres with no tread wear marking may be used provided they meet all other specifications listed.
e) The tyre must have been listed or is listed in a road tyre section of the manufacturer's tyre catalogue and have been commercially available.
f) Road legal re-treaded tyres. Tyres must have the correct remoulder's speed rating etc and be legible as per AS 1973-1985.

NON-PERMITTED TYRES

a) Racing tyres.
b) Tyres that are road legal for use on Australian roads that have been designed and marketed for motorsport/competition use.

IF IN DOUBT, PLEASE SEEK CLARFICATION FROM SSA INC TECHNICAL COMMITTEE

15. BRAKES

a) Foot operated O.E.M. brake system to remain standard and operate correctly on all four wheels, and be effective at race speed.

b) No brake isolation switch/s or drilled/lightened disc rotors allowed.

16. FUEL

THE USE OF COOLING SYSTEMS FOR FUEL IS NOT ALLOWED.

<u>All cars are to comply to the following fuel specification.</u>

Petroleum (01/07/18)

a) Must be supplied from a commercial outlet, via a multi volume network available to the public obtained through a bowser pump.
b) Multi volume PULP fuel varieties such as Shell V-Power, Caltex Vortex, BP Ultimate etc are permitted ONLY.
c) Only Fuel that has a maximum Octane (RON) of 98 is permitted.
d) Only Fuel that has a maximum Specific gravity or density of 0.775 is permitted.
e) Fuels sourced from refinery or depot supplied fuels that are different or superior qualities are NOT permitted.
f) Ethanol and Ethanol Blend fuels such as E10 and E85 are NOT permitted.
g) Blending of Ethanol based fuels with PULP fuels is NOT permitted.

h) The use of exotic or unleaded racing type fuels, such as ELF and/or additives that improve fuel quality or increase octane (RON) are NOT permitted.

DEFINITION- RON = RESEARCH OCTANE NUMBER.

Fuel shall be tested as per the SSA Inc. policies and procedures.

17. FUEL TANK AND FUEL SYSTEM

a) The original fuel tank to be removed and replaced by a tank of no more than 30 litres capacity or 8 US Gallons. A fuel tank that is marketed as an 8 US Gallon tank is accepted. (01/07/23)

b) Tank may be constructed of minimum 1mm steel or minimum 3mm aluminium alloy. All joints to be welded in a professional standard.

c) Competition type "plastic" cell permitted. Plastic fuel cells fitted with metal filler ring must be fitted with an anti-static earth wire. Jerry can or boat tank may be used but must comply with the above metal thicknesses. (01/07/23)

Plastic marine tanks have been suggested for use instead of jerry cans as these are a safer option to the jerry can.

d) All fuel tanks to be constructed with pick-up fittings etc., coming from the top, bottom or lower sides of the tank.

e) The boot floor must remain, except for a hole 25mm larger than the fuel tank, directly below the tank. Cars that have cross members across the boot floor pan area; the drilling of multiple holes as large as possible that will allow spilt fuel to escape quickly is allowed. Cross member not to be cut or drilled. If rusted body material has been removed from the boot area it must be replaced with 1.6mm steel. No cutting out of boot floor other than for fuel tank allowances. (01/07/18)

f) Filler caps to be positive seal and be behind and below the fire wall.

g) Lever on cam locked caps to be clipped.

h) Tank vent to be fitted with an anti-spill device and must go through the floor of the boot.

i) Fuel tank to be securely mounted in the boot area of the vehicle and be mounted on suitable bar work or on a frame mounted directly to the bar work. A minimum clearance of 150mm forward of the lower rear end of the boot panel and 300mm minimum from side of tank to be maintained around tank and isolated from driver by firewall minimum 0.9mm metal. (01/07/19) For all cars that do not have an OEM firewall to separate the fuel tank from the driver – the fuel tank must be fully enclosed – this includes the base as well as the sides and top. (14/09/19)

j) Fuel tank not to be mounted using brackets welded to tank or cell. Minimum strap size is to be 25x3mm FMS. Tank to be protected by substantial barwork on all sides.

k) Fuel tank protection: Bar must be constructed of minimum 38x3mm CHS or 40x40x3mm RHS with 25x3mm CHS OD MINIMUM angled brace bars to be fitted each side of the fuel tank and be 25mm minimum clearance all around tank and filter, projecting a line from the rear wheel centre to the bar. Refer to photos in Section 19. (24/11/18)

(i) Bar is to prevent side entry to tank by nose of another vehicle. Protector must be 25mm lower than an underslung tank and mounted as per Fig 12.

(ii) Underslung fuel tank is a fuel tank that has some portion below the bumper or chassis rails and therefore is to have a fuel tank protector bar fitted.

(iii) Non underslung fuel tank is a fuel tank that has some portion above the bumper tube or chassis tube

and therefore is to have a fuel tank protector bar fitted. Protector bar must be 25mm higher than a non-underslung tank and mounted as mirror of Fig 12. (Brace bars not to constitute bumper mountings)

(iv) Fuel tank protection bars must have radius corners as per Fig 12. No straight side pipes for jacking to extend from protection bars.

FUEL LINES

a) Fuel line from tank to engine, is to have a flexible section within 75mm of the tank, the line must be securely fixed in position.

b) Barbed fittings of the correct size must be used in conjunction with screw type clamps when connecting flexible fuel line. (Genuine SAE R6 fittings and hose exempted).

c) Fuel lines passing through cabin area are to be secured and isolated from electrical wiring and be positioned in such a manner so as potential damage is avoided. (01/07/2020)



d) Neoprene, reinforced plastic, or black fuel line may be used. OEM type Bundy steel tubing may be used through the car or under the car. Flexible fuel lines can pass through the cabin area. Bulkhead type fittings may be used where flexible fuel lines pass through front and rear firewalls as an alternative to grommets and are highly recommended. (01/07/2020)

e) High pressure lines are to use high pressure hoses and fittings.

f) Carburettor Cars Only: The fuel line to the engine must be fitted with a quick action NON-LEAK fuel tap, in working order. The actuator or switch is to be securely mounted within easy reach of the driver, and crash crew, and clearly marked “FUEL” ‘ON-OFF”.

g) Solenoid valves or remote mounted fuel taps are permitted.

h) Flexible fuel lines may be run through a metal conduit in the cabin area, but wiring in the same conduit is not acceptable.

i) Front and rear firewall to be sealed around fuel line or conduit. If a return line is used, it must be fitted with a one-way valve.

j) OEM electric fuel pumps permitted if standard fitment. Can be replaced with non-high-performance pump.

k) Electric fuel pump MUST be isolated from the Driver by a firewall and switched off by the KILL switch and by an engine monitoring relay. (01/07/23)

Fig.12

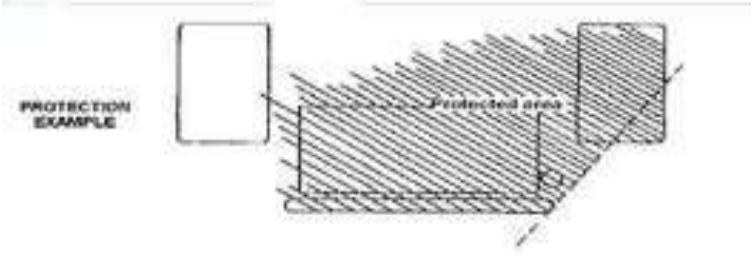

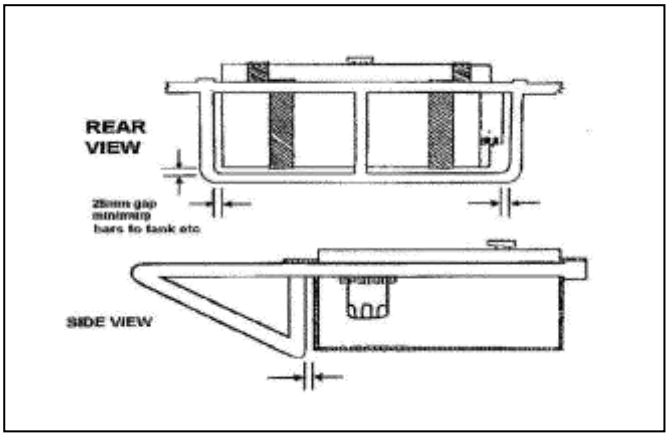

TABLE 1. LIST OF APPROVED/ACCEPTED MAKES/MODELS – if the car you are interested in is not listed here you must make application for inclusion – prior to commencing building – your car may not be automatically accepted. Click Here

DAIHATSU	**FORD**
Charade XTE 81	Escort MK 70-73
Charade XTE 81-83	
Charade CSCX 83-85	**HOLDEN**
Charade CSCX 85-87	Torana HB 67-69
Charade G100 87-93	Torana LC/LJ 69-75
Charade G102 87-93	
Charade G200 93-96-00	**HYUNDAI**
	Excel X2 89-95
LEYLAND	Excel X3 95-97
Mini 1100 69-71	
Mini Clubman 1100 71-73	**MITSUBISHI**
	Lancer CE 1996-02/2004 2 Door (18/10/25)
NISSAN/DATSUN	Lancer CE 1996-02/2004 4 Door (18/10/25)
1200 Coupe 70-74	Mirage 1996-02/2004 (18/10/25)
1200 Sedan 70-74	
120Y 74-79	**SUZUKI**
Sunny 79-81	Swift SA 84-88
	Swift SF 88 - on
TOYOTA	
Corolla KE20 Sedan 70-74	
Corolla KE25 Coupe 70-74	
Corolla KE30 Sedan 74-78	
Corolla KE35 Coupe 74-78	
Corolla KE50 Lift Back 77-78	

TABLE 2 ENGINE LIST FOR VEHICLE MODEL – CARBURETED

MAKE	MODEL	STANDARD BORE	STANDARD STROKE
DATSUN	1200, 120Y, Sunny	73.0mm	70.0mm
DAIHATSU	Charade	76.0mm	73.0mm
FORD	Escort MK 1	80.978mm	53.29mm
HOLDEN	Torana	77.77mm	60.96mm
LEYLAND	Mini 1100	64.588mm	83.72mm
SUZUKI	Swift SA SF	74.0mm	77.0mm
TOYOTA	Corolla 1200	75.0mm	66.0mm

TABLE 3 – ENGINE LIST FOR VEHICLE MODEL – EFI

MODEL	ENGINE DESCRIPTION	STANDARD BORE	STANDARD STROKE
DAIHATSU			
Charade G102 1987-1992 Charade G200 Range 93-96	1300 OHC 4 Cylinder 16 Valve SOHC	76mm 76mm	71.4mm 71.4mm
Charade 1993-1996-00	1500 OHC 4	76mm	82.6mm

G200 Range	Cylinder 16 Valve SOHC		
HYUNDAI			
Excel 02/90-08/94 X2	1500 SOHC – 4GDJ	75.5mm	82.0mm
Excel 09/94-12/97 X3	1500 SOHC model only – 4GEK	75.5mm	83.5mm
MITSUBISHI (16/09/17)			
Lancer 1996-02/2004 CE (18/10/25)	1500 SOHC 4G15	75.5mm	82mm
Mirage 1996-02/2004 (18/10/25)	1500 SOHC 4G15	75.5mm	82mm

TABLE 4 – THROTTLE BODY

MAKE	BUTTERFLY SECTION I.D.
DAIHATSU	
Charade 1987-1992 G102 1.3 litre	45mm
Charade 1993-1996-00 G200 Range 1.3 litre	45mm
Charade 1993-1996-00 G200 Range 1.5 litre	50mm
HYUNDAI	
Excel 02/90-08/94 X2	41mm
Excel 09/94-12/97 X3	41mm
MITSUBISHI (16/09/17)	
Lancer 1996-02/2004 CE (18/10/25)	46mm
Mirage 1996-02/2004 (18/10/25)	46mm

TABLE 5 – COMPUTER AND INJECTOR LIST

COMPUTERS

CAR TYPE	COMPUTER	COMPUTER BRAND	COMPUTER NUMBER
DAIHATSU			
Charade 1987-1992 G102 1.3 litre Charade 1993-96 G200 Range 1.3 litre	**HC-E**		89661-87715 89661-87730 89661-87744 (01/07/18)
Charade 1993-1996-00 G200 Range 1.5 litre	**HE-E**		89661-87758 89661-87735 (01/07/18)
HYUNDAI			
Excel 02/90-08/94 X2			39110-24550 39110-24880 39110-24881
Excel 09/94-12/97 X3			39110-22335 39110-22A00 39110-22336
MITSUBISHI (16/09/17)			
Lancer 1996-02/2004 CE (18/10/25)			Series 1 – MD336612 Series 2 – MD351552

Mirage 1996-02/2004 (18/10/25)			Series 1 – MD336612 Series 2 – MD351552

Note – *it is preferable – for the Lancer ECU to be tested and sealed by Cool Drive that you send the original key, key reader and immobiliser when sending the ECU for sealing. If not available, contact Cool Drive direct prior to sending the ECU for sealing. (01/07/18)*

STANDARD FITMENT FUEL INJECTORS

CAR TYPE	FUEL INJECTOR
DAIHATSU	
Charade 1987-1992 1993-1996 G102 – 1.3 litre	195500 – 1910 (24/11/18)
Charade 1993-1996-00 G200 Range – 1.3 and 1.5 litre	195500 – 2140 (1300 – 1.3 litre) (24/11/18) 195500 – 3030 (1500 – 1.5 litre) (24/11/18) 195500 – 2040 (1500 – 1.5 litre) (24/11/18)
HYUNDAI	
Excel 89/92 X2	35310 - 24010
Excel 92/94 X2	35310 – 24570 (24/11/18)
Excel 94/97 X3	35310 - 22010
MITSUBISHI (16/09/17)	
Lancer 1996-02/2004 CE (18/07/25)	CDH166 (16/09/18)
Mirage 1996-02/2004 (18/10/25)	CDH166 (14/09/19)

TABLE 6 - VALVE SIZES – NON EFI models - maximum two (2) valves per cylinder (16/09/18)

MAKE	MODEL	INTAKE VALVE SIZE	EXHAUST VALVE SIZE
DATSUN	1200	35.0mm	29.0mm
DATSUN	120Y, Sunny	37.0 -37.2mm	30.0 – 30.2mm
DAIHATSU	Charade	36.0mm	33.0mm
FORD	Escort MK1	35.69 – 35.94mm	31.50 – 31.75mm
HOLDEN	Torana	33.45 – 33.60mm	29.90 – 30.05mm
LEYLAND	Mini 110	29.23 – 29.26mm	25.40 – 25.53mm
SUZUKI	Swift SA	36.0mm	30.0mm
SUZUKI	Swift SF	35.0mm	28.0mm
TOYOTA	Corolla 1200	36.0mm	29.0mm

TABLE 6a - VALVE SIZES – EFI Models (16/09/18)

MAKE	INTAKE VALVE SIZE	EXHAUST VALVE SIZE
DAIHATSU		
Charade 1987-1993 G100 & G102 1.3 litre	30.00mm	33.00mm
Charade 1993-1996 G200 Range 1.3 litre	30.00mm (01/07/19)	26.00mm (01/07/19)
Charade 1996-00 G200 Range 1.5 litre	30.00mm (01/07/19)	26.00mm (01/07/19)
HYUNDAI		
Excel 02/90-08/94 X2	35.05 Head 101.6mm long x 6.6mm stem	30mm Head 101mm long x 6.6mm stem
Excel 09/94-12/97 X3	2 x 27.44mm Head 99mm long x 6mm stem	32mm Head 98.3mm long x 6mm stem
MITSUBISHI (16/09/17)		
Lancer 1996-02/2004 CE (18/10/25)	26mm and 31mm (2 valves per cylinder)	33mm
Mirage 1996-02/2004 (18/10/25)	26mm and 31mm (2 valves per cylinder)	33mm

TABLE 7 - CARBURETTOR LIST

Carburetted Cars

MODEL OF CAR	CARBURETTOR PERMITTED – Venturi Sizes
Datsun – 1200, 120Y, Sunny	Primary 20mm, secondary 26mm.Twin Barrel Down Draught Primary
Daihatsu – 1.0 Litre 3 Cylinder	Primary 18mm, secondary 25mm. Twin Barrel Down Draught
Ford – Escort 100 MK1	Ford 1250 Single Barrel
Holden – Torana 1200 HB-LJ	Zenith 301Z. Solex 30/PSEI/6 & 7. Single Throat Down Draught
Holden – Torana 70 Series	CD 150 Zenith-Stromberg. Single Throat Down Draught
Leyland – Mini 1100 engines	1-½" S.U.
Suzuki – 1.0 Litre 3 Cyl	Primary 18mm, secondary 25mm. Twin Barrel Down Draught
Toyota – 1200 3K Series Engine	Primary 21mm, secondary 25mm. Twin Barrel Down Draught

TABLE 8 – VEHICLE DIMENSIONS

Note: *Listed measurements for the track includes the 50mm max. allowance and 160mm rim measurement – to accommodate SSA Wheel Track measuring tool.

**Method of measuring wheelbase shall be with each front wheel pointing straight ahead. Measure distance from front axle centre to rear axle centre on each side of vehicle. Add dimensions for left and right and divide by 2, allowable tolerance is +/- 1%.

MODEL	WHEELBASE MM	**WHEELBASE MINIMUM MAXIMUM	FRONT TRACK MM	REAR TRACK MM	LENGTH MM	WIDTH MM
DATSUN		**New 01/07/2020**				
1200 Coupe 1970-74	2300	2277 / 2323	1450	1455	3820	1515
1200 Sedan 1970-74	2300	2277 / 2323	1450	1455	3835	1515
120Y 1974-79	2340	2317 / 2363	1460	1455	3950	1545
Sunny 1979-81	2340	2317 / 2363	1540	1510	3940	1600

MODEL	WHEELBASE MM	**WHEELBASE MINIMUM MAXIMUM	FRONT TRACK MM	REAR TRACK MM	LENGTH MM	WIDTH MM
DAIHATSU		**New 01/07/2020**				
Charade XTE 80-81	2300	2277 / 2323	1510	1490	3485	1510
Charade XTE 81-83	2300	2277 / 2323	1510	1495	3510	1510
Charade CSCX 83-85	2320	2297 / 2343	1550	1520	3550	1550
Charade CSCX 85-87	2320	2297 / 2343	1550	1520	3595	1550
Charade G100 87-93	2340	2317 / 2363	1595	1575	3680	1615
Charade G200 93-96	2395	2371 / 2419	1595	1600	3750	

MODEL	WHEELBASE MM	**WHEELBASE MINIMUM MAXIMUM	FRONT TRACK MM	REAR TRACK MM	LENGTH MM	WIDTH MM
FORD		**New 01/07/2020**				
Escort MK 1970-73	2400	2377 / 2424	1470	1490	3960	1590

MODEL	WHEELBASE MM	**WHEELBASE MINIMUM MAXIMUM	FRONT TRACK MM	REAR TRACK MM	LENGTH MM	WIDTH MM
HOLDEN		**New 01/07/2020**				
Torana HB 1967-69	2440	2416 / 2464	1505	1505	4090	1600
Torana LC LJ 69-75	2433	2409 / 2457	1505	1505	4120	1600
Disc Brake Model	2433	2409 / 2457	1520	1505	4120	1600

MODEL	WHEELBASE MM	**WHEELBASE MINIMUM MAXIMUM	FRONT TRACK MM	REAR TRACK MM	LENGTH MM	WIDTH MM
LEYLAND MINI		**New 01/07/2020**				
1100 1967-71	2030	2010 / 2050	1420	1400	3175	1410
Clubman 1100 71-73	2030	2010 / 2050	1420	1400	3220	1410

MODEL	WHEELBASE MM	**WHEELBASE MINIMUM MAXIMUM	FRONT TRACK MM	REAR TRACK MM	LENGTH MM	WIDTH MM
SUZUKI		**New 01/07/2020**				
Swift SA 1984-88	2245	2223 / 2267	1540	1510	3585	1530
Swift SF 1988 on	2264	2242 / 2288	1575	1550	3745	1575

MODEL	WHEELBASE MM	**WHEELBASE MINIMUM MAXIMUM	FRONT TRACK MM	REAR TRACK MM	LENGTH MM	WIDTH MM
TOYOTA – Corolla		**New 01/07/2020**				
KE20 Sedan 1970-74	2335	2312 / 2358	1465	1455	3910	1535
KE25 Coupe 1970-74	2335	2312 / 2358	1465	1455	3910	1570
KE30 Sedan 1974-78	2370	2346 / 2394	1505	1495	3995	1570
KE35 1974-78	2370	2346 / 2394	1505	1495	3995	1570
KE50 Lift Back 77-78	2370	2346 / 2394	1505	1495	4120	1600
KE55 – May use body only						

TABLE 9 – VEHICLE DIMENSIONS FOR EFI MODELS

Note: *Listed measurements for the track includes the 50mm max. allowance and 160mm rim measurement – to accommodate SSA Wheel Track measuring tool.

**Method of measuring wheelbase shall be with each front wheel pointing straight ahead. Measure distance from front axle centre to rear axle centre on each side of vehicle. Add dimensions for left and right and divide by 2, allowable tolerance is +/- 1%.

MODEL	WHEELBASE MM	**WHEELBASE MINIMUM/MAXIMUM (01/07/2020)	FRONT TRACK MM	REAR TRACK MM
DAIHATSU				
Charade 1987-93 G100 & G102 1.3	2340	2317 / 2363	1595	1575
Charade 1993-96-00 G200 1.3 and 1.5	2395	2371 / 2419	1595	1600
HYUNDAI				
Excel 1989-95 X2 1.5	2380	2356 / 2404	1599	1551
Excel 1995-97 X3 1.5	2400	2376 / 2424	1630	1620

MITSUBISHI (16/09/17)				
Lancer 1996-2002 CE 2 Door (01/07/25)	2415	2391 / 2439	1660	1670
Lancer 1996-02/2004 CE 4 Door (18/10/25)	2500	2475 / 2525	1660	1670
Mirage 1996-02/2004 (18/10/25)	2415	2391 / 2439	1660	1670

TABLE 10 - TYRE RATINGS - THE MAXIMUM IS A (H) RATING.

TYRE RATINGS	SPEED RATING	TYRE RATINGS	SPEED RATING
A1 – A8	5-40 kmh	M	130 kmh
B	50 kmh	N	140 kmh
C	60 kmh	P	150 kmh
D	65 kmh	Q	160 kmh
E	70 kmh	R	170 kmh
F	80 kmh	S	180 kmh
G	90 kmh	T	190 kmh
J	100 kmh	U	200 kmh
K	110 kmh	H	210 kmh
L	120 kmh	V	240 kmh

19. REFERENCE PHOTOS

Flange Gasket indicating permitted manifold type for Daihatsu Charade



Exhaust Manifold Flange Gasket
Daihatsu Charade
G102 1.3 litre EFI



Exhaust Manifold Flange Gasket
Daihatsu Charade
G200 1.3 or 1.5 litre EFI

Typical Fuel Tank Protection Bar – with 25mm clearance around tank. Braced both sides.



