SPEEDWAY SEDANS AUSTRALIA INC

ONLINE – VERSION 17 – JULY 2025

SSA NATIONAL 4

SPECIFICATION MANUAL

Rules and Regulations

Speedway Sedans Australia Inc
P.O. Box 163 HOLDEN HILL SA 5088

Enquiries to State Technical Representative
or email: technical@speedwaysedans.com

Website: www.speedwaysedans.com

The content of this manual is to be read in conjunction with the SSA Class Technical Manual available as a separate download. Click Here

Class Specification: SSA National 4
TABLE OF CONTENTS

1. **BODY ROLLING SHELL** 4
   - Interior Decking and Firewall 6
2. **ROLL CAGE** Material and Design Option effective 01 July 2019..... 6
   - Material Dimensions List..... 7
   - Cages Diagrams..... 8
   - Chassis 15

2a. **ROLL CAGE** for cars built and registered using original Material and Design 16
   - **Ballast** 23

3. **BUMPER BARS & OPTIONAL EXTERNAL BARWORK**..... 23
   - Rub Rail 25
   - Front and Rear Override Bars 26

4. **ENGINE** 26
5. **BATTERY AND ELECTRICAL SYSTEM** 27
6. **EXHAUST SYSTEM** 27
7. **COOLING SYSTEM** 28
8. **TRANSMISSION / DRIVELINE** 29
9. **STEERING** 30
10. **SUSPENSION** 30
11. **WHEEL TRACK** 30
12. **WHEELBASE** 31
13. **WHEELS** 31
14. **TYRES** 32
15. **BRAKES** 32
16. **FUEL** 33
17. **FUEL TANK AND FUEL SYSTEM** 33
18. **TABLES –** .....
   - Table 1 - List of approved/accepted makes/models..... 35
   - Table 2 – Dimensions 36
   - Table 3 – Engine setback for cars converted FWD to RWD 39

PLEASE NOTE: Where possible the data in the Class Specification Manual has been taken from www.automobile-catalog.com which is the main reference book used by the SSA Inc. Information that is not available at www.automobile-catalog.com is taken from the Manufacturers Workshop Manuals. We have checked and cross checked the information in this Manual. If you do find something that does not seem right, anywhere in this Specification Manual, please let us know immediately, so that we can check it out and if it is wrong, we can change it.

© **All rights reserved. Reproduction or translation of this Manual, in whole or part is not permitted without written authorisation from the Speedway Sedans Australia Inc.**

SPEEDWAY SEDAN AUSTRALIA INC. SPECIFICATIONS

SSA National 4
CLASS SPECIFICATION

The content of this manual is to be read in conjunction with the SSA Class Technical Manual available as a separate download. Click Here

Refer to Class Technical Manual for information regarding the following items – Click Here (01/07/20)

PRESENTATION
DRIVER SAFETY
PROTECTIVE CLOTHING
SEAT BELTS and INSTALLATION
SEATS and SEAT MOUNTING
DUAL REGISTRATION
WINDOW NET and FITTING
PADDING
FIRE EXTINGUISHER
TRANSPONDER MOUNTING
ENGINE SEALING

GLOSSARY OF TERMS & DEFINITIONS:

CDS – Cold Drawn Seamless
ERW – Electric Resistance Welded
CHS - Circular Hollow Section.
FMS - Flat Mild Steel
RHS - Rectangular Hollow Section.
W.T - Wall thickness.
O.D - Outer Diameter
I.D. – Inner Diameter
OEM - Original Equipment Manufacture; used to indicate parts used, or the complete vehicle as it left the production line from the original manufacturer and means for make and model unless otherwise stated.
CARBURETTOR - Is to have all working parts in use, e.g., needle and seat, fuel bowl, float, jets etc and fuel is to be naturally delivered to the main jet by atmospheric pressure. The air pressure in the carburettor venturi being lower than atmospheric pressure, allows fuel then to flow from the bowl to the carburettor venturi as the pressure in the carburettor throat decreases.
Fuel is then drawn down the venturi and carburettor throat by vacuum provided by the rotation of the engine. Carburettors that are of different configuration than that of the above must be submitted to SSA Inc Technical for permission to be used. A complete description must accompany the submission to substantiate a request.

PROPRIETARY – (of a product) marketed under and protected by a registered trade name. (01/07/17)

SEDAN RACE CAR – Sedan class car is built from a full hard top road car with a full metal roof (non-removable), seating a minimum of four (4) persons as per the compliance plate (or manufacturers specifications) and catalogued for sale. i.e., available through an authorised Dealer sales and service networks. (24/04/24)

Note – All new and existing cars must comply with all specifications as detailed. If 'IT' is not in the book, it will be considered non-compliant until written approval for use is issued by SSA Inc Technical and ratified by the SSA Inc Board. (01/07/23)

Prior to constructing a car not listed in the tables at the rear of the class specification manual full details will be submitted to SSA Inc Technical. Submissions will be handled in a confidential manner. (01/07/23)

There is a specific form to be completed – Application for Additional Make/Model Not Currently listed -please refer to specific class specification technical pages – Click Here (01/07/18)

Once approved the approved vehicle will be included in the Class Specification Manual and the opportunity will be available for any competitor to build the same vehicle. (01/07/17)

It is permitted to convert a Front Wheel Drive (FWD) vehicle manufactured after 1 January 1992 to a Rear Wheel

Drive (RWD) vehicle only by submission to SSA Inc Technical and ratified by SSA Inc Board. The approval process to remain until further notice. (01/07/23)

Once approve the approved vehicle will be included in the Class Specification Manual and the opportunity will be available for any competitor to build the same vehicle. (01/07/17)

The specifications contained in this document have been selected to encourage and foster the racing of 4 Cylinder mono passenger cars, both standard and modified. All cars are to be based on a passenger car and the silhouette of that model must be maintained and although the modifications permitted are variable and could be used to take the construction away from being based on a mono sedan. This is not the intention of these specifications.

SSA National 4 are built from a hard-top 4-cylinder mono passenger road car. If unsure of model options refer to www.automobile-catalog.com or a car park check if required. Utilities, panel vans, station wagons and four wheel/all wheel drive not permitted. If using a four wheel/all wheel drive car, then you must select front or rear wheel drive prior to car's registration. Other drive option must be disabled. All controls for the vehicle's operation must remain on the right-hand side.

Passengers: Optional – all bar work to be mirrored from right hand side. Passengers must face forward.

As of 1 July 2023, there is a Standard sub-class included in National 4's. This standard sub-class will use the SSA Junior Sedan specification in its entirety. Cars will be registered as National 4 and drivers will hold a senior competition licence. Click here for a link to the SSA Junior Sedan specification manual. (01/07/23)

1. BODY/ROLLING SHELL:

a) All vehicles must be post 1963 and have been available with a three-or four-cylinder engine.

b) Race car must use an original turret including 'A' and 'C' pillars to the bottom of window height. The front firewall and front floor pan, to the main roll cage hoop, must be retained. 'B' pillar, dash, seat brackets may be removed. All other panels may be replaced with suitable fibreglass, aluminium, metal sheet, alucabest and/or plastic replica panels to a maximum of 2mm thick.

c) No modifications to engine firewall to allow engine block positioning. Upper front firewall/plenum section and dash panel may be removed and fabricated with metal minimum 0.9mm maximum 2mm thickness. Rear floor pan, inner guards and original chassis rails behind the main roll cage hoop may be modified and/or removed and refabricated (See rule 2 Chassis Size).

d) FWD to RWD Conversion (14/09/19)
   (i) Engine Block Set back - the engine may be repositioned in the body in the north south position. The engine block to be no further back than 12.5% of the OEM wheel base measured from the centre of both front stub axles with the wheels in the straight-ahead position to the rear face of the engine block as measured parallel to the centreline of the vehicle.
   (ii) Modifications to the firewall and tunnel/floor are permitted for the fitment of the engine, gearbox, tail shaft and their relevant accessories. All modifications will require the use of minimum 0.9mm body metal professionally installed, welded and sealed. (01/07/21)
   (iii) A rear differential as per specification to be fitted.

e) Rear firewall may be removed and a fabricated one fitted. Maximum thickness of material 2mm, minimum thickness 0.9mm.

f) Original front chassis rails and front panelling may be removed and/or fabricated to a professional and safe standard (see Rule 2 Chassis size)

g) All holes in the firewalls for fuel lines and power cables etc. must be fitted with suitable grommets.

h) All fittings such as door handles, visors, ornamental mouldings, body trim strips; wheel trims etc. must be removed.

i) All unnecessary flammable material must be removed, e.g., door trims, floor coverings; attached sound deadening material permitted except near exhaust system.

j) All window glass and lights must be removed. Window Glass openings must not be covered with fibreglass or other material. Exception: May have 3mm clear polycarbonate type material rear door/quarter side windows in place of OEM glass. To have wording 'NATIONAL 4' and drivers surname in 50mm letters, plus car number in 150mm high fluro colour affixed to the panel. (01/07/23)

k) Instrument glass permitted.

l) Replacement panels must be securely fastened; self-drilling (TEK) screws are **not** to be used. All headlight and grill opening must be filled in with a suitable body material. All panels to be mounted in OEM silhouette. (01/07/23)

m) Front and rear under bumper stone trays to be in place.

n) OEM or aftermarket body kits permitted for make, model and series. Fitment must be of professional standard and add to vehicles aesthetic appearance. Until further notice SSA Technical Committee will hold the final decision on the body kit and its components suitability. (01/07/21)

o) Non-OEM spoiler or aerofoil fitments – not permitted to be above half rear window height unless they are part of an aftermarket body kit (see above specification Item n)), not wider than waistline of the car at that point nor further to the rear than the back of an original rear bumper. OEM spoiler for make and model permitted. All spoilers/aero foils to be securely attached to substantial body work or bar work. (01/07/21)

p) Fuel Tap lever or switch to be marked, indicating FUEL and the positions ON/OFF.

q) Bonnet to be securely fastened.
   i) Four bonnet pins (5 for fibreglass) to be 12mm minimum to 15 mm maximum mild steel, or approved equivalent.
   ii) Bonnet pins are to be in the bonnet, not sides of mudguards. No mounting pins in the side of panels, i.e., mudguards.
   iii) Bonnet lock pins 3mm minimum to 6mm maximum Heavy duty large reinforcing washers (min 30mm O.D.) to be fitted to all bonnets pin holes.
   iv) The use of Dzus clips on bonnets or boot lids is not acceptable. Exception being hatchbacks with a permanently fixed hatch panel. (24/11/18)

r) Similarly, boot lid to be securely fitted, using pins and large washers as for bonnet. A removable boot lid to be securely mounted at four points.

s) Hinged bonnet and boot lid permitted, using minimum of two pins. Skeletonising not permitted on hinged panels within 50mm of hinges. The hinged panel to be welded to the bonnet or boot skin.

t) Fuel tank area must be accessible for scrutineering, 300mmx300mm (access panel may be in rear parcel shelf, deck panel or be the boot lid).

u) Grille may be fabricated. Light and grill apertures may be filled using maximum 1.6mm metal sheet, fibreglass or plastic. Grill to be 5mm woven mesh if air flow is required. Multi-piece sheet metal, brittle plastic, or die cast grille and/or fittings not permitted.

v) Flares to be of panel replacement material only – e.g., fibreglass, plastic. Flare edges and/or guard edges are not to be reinforced. (01/07/21)

w) Rear vision mirror NOT permitted.

x) No “car to pit” electronic transmission.

y) A Bonnet bulge is permitted for the fitment of air cleaner/s. If bulge is open it may only open forward and must be fitted with fire suppression mesh and be no higher than 100mm.

z) Transmission tunnel may be NOTCHED ONLY at the points where front and rear spreader bars intersect transmission tunnel. Under seat floor pan/tunnel area may also be modified to assist in the proper attachment of seat base bar work or sub frame and harness mounting tabs. All modifications must be of a professional standard and be fully welded. (01/07/21)

INTERIOR DECKING AND FIREWALL:

Driver must be protected and isolated from mechanical, fuel, electrical exhaust components by metal firewalls, minimum 0.9mm thick. If car uses Interior deck sheeting (Super Sedan style), it shall enclose the complete cabin and shall extend through the rear panel.

ROLL CAGE (01/07/22)

Newly constructed vehicles will be able to option the use of the previous Section 2a Roll cage Material & Design

Both Roll Cage specifications will be subject to their individual respective design and material compliance requirements and are unable to be cross referenced.

Construction of Roll Cages in Section 2 as published in this Specification Manual inclusive of the Material and Design, is the preferred option and is highly recommended by Speedway Sedans Australia.

2. ROLL CAGE – Material and Design Option Effective for Registration commencing 1 July 2021

GENERAL

a) The roll cage is to provide a safe enclosed environment for the driver and is intended to prevent the collapse of the cabin area under impact.
b) The roll cage is to fully enclose the driver with the roll bar tubing that constitutes a cage type framework, braced fore and aft.
c) All bar work must be entirely inside the OEM glassed area of the cabin.
d) The cage must extend behind the driver’s seat and forward to the windscreen area and incorporate adequate foot protection.
e) All A-leg and roof hoop options must be constructed so as the driver can enter and exit the car through the driver’s side window opening at all times. A-legs and other roll cage bracing that protrude through the driver’s side window opening that significantly impede the driver’s ability to enter or exit the car will be deemed non-compliant. (01/07/23)
f) All bends to be made using a bender with the correct size former using a cold working process with no evidence of crimping, wall failure or significant weakening. The centreline bend radius must be 3 times the tube diameter. If during the bending process the tubing is ovalized the ratio of minor to major diameter must be 0.9 or greater.
g) All bars to be suitably notched to accommodate correct assembly of roll cage.
h) All welding is to be of a high quality with adequate penetration using only gas shielded arc welding techniques. e.g., mig or tig. All joints to be fully welded.
i) Sonic Testing to be performed only on a straight section of tube. It is the owner’s responsibility to remove paint/powder coating if required. (Sonic Test at not less than 2.40mm ABSOLUTE) (01/07/23)
j) For Production Sedans and Street Stocks with Optional Passengers:
Roll cage left hand side must mirror the right-hand side and have full cruciform. Passenger handle for support is optional.

ROLL CAGE – Material and Design Option Effective for Registration commencing 1 July 2021

MATERIAL SPECIFICATION

a) Please refer to Minimum Dimensions Table following for bar size and types. (01/07/23)
b) Minimum Cold Drawn Seamless (CDS) mild steel tube (CHS) with a minimum tensile strength of 350 MPA. Unless otherwise specified. (01/07/2020)
c) Where RHS is permitted all tube to be of AS1163 standard mild steel with a minimum tensile strength of 350 MPA.
d) No galvanising on any tube allowed.
e) All tube must display good elongation and welding properties.

MINIMUM DIMENSIONS TABLE (01/07/23)

Bar #1	Main Hoop Bar	44.45 x 2.6mm	CHS
Bar #2	Roof Hoop Bar	44.45 x 2.6mm	CHS
Bar #3	Front A Legs / A Pillar Bar	44.45 x 2.6mm	CHS
Bar #4	Centre Roof Bar	38 x 2.6mm	CHS
Bar #5/6	Main Hoop Centre Spreader Bar	38 x 2.6mm	CHS
Bar #6/5	Seat Back/Shoulder Harness Bar	38 x 2.6mm	CHS
Bar #7	Main Hoop Diagonal Bars	38 x 2.6mm	CHS
Bar #8	NASCAR Door and Dropper Bars	38 x 2.6mm	CHS
Bar #9	Passenger Side Door Bars	38 x 2.6mm	CHS
Bar #10	Lower Windscreen Dash Bar	38 x 2.6mm	CHS
Bar #11	Centre Windscreen Bar (14/09/19)	25 x 2.6mm	CHS
Bar #12	Rearward Brace Bars	38 x 2.6mm	CHS
Bar #13	Foot Protection Bar	38 x 2.6mm	CHS
Bar #14	Foot Protection Support Bar (14/09/19)	25 x 2.6mm	CHS
Bar #15	Roll Cage Sub Frame Bar – these 3 choices are the only size and types of material accepted	44.45 x 2.6mm or 40 x 40 x 3.0 mm or 50 x 50 x 2.5mm	CHS RHS RHS
Bar #16	Lower Spreader Bar – Front	38 x 2.6mm	CHS
Bar #17	Lower Spreader Bar – Front Brace	38 x 2.6mm	CHS
Bar #18	Lower Spreader Bar - Rear	38 x 2.6mm	CHS
Bar #19	Lower Windscreen / Dash Bar Support - optional	38 x 2.6mm	CHS
Bar #20	Seat Base Mounting / Harness Mounting Bar	38 x 2.6mm	CHS
Bar #21	Rear Chassis Sub Frame Rail – these 5 choices are the only size and types of material accepted (01/07/21)	44.45 x 2.6mm or 38 x 2.6mm or 40 x 40 x 2.5mm 40 x 40 x 3mm 50 x 50 x 2.5mm	CHS CHS RHS RHS RHS
Bar #22	Front Chassis Sub Frame Rail – optional – these 3 choices are the only size and types of material accepted	38 x 2.6mm or 40 x 40 x 2.5mm or 50 x 25 x 3mm	CHS RHS RHS
Item #23	Additional / Optional Roll Cage Supports / Bracing	25 x 2.6mm Minimum	CHS

POINT A	The point where top NASCAR door bar (Bar #8), A pillar leg (Bar #3) and lower windscreen dash bar (Bar #10) intersect – Refer Fig 3 (ii)

ROLL CAGE – Material and Design Option Effective for Registration commencing 1 July 2021	
POINT B	The point where the top NASCAR door bar (Bar #8), Main Hoop (Bar #1) and Main Hoop Centre Spreader Bar (Bar #5) intersect – Refer Fig 3 (ii)
POINT C	The point where sub frame bar (Bar #15), base of A pillar leg (Bar #3) and lower spreader bar – front (Bar #16) intersect – Refer Fig 3 (ii)

Fig 3 (i)

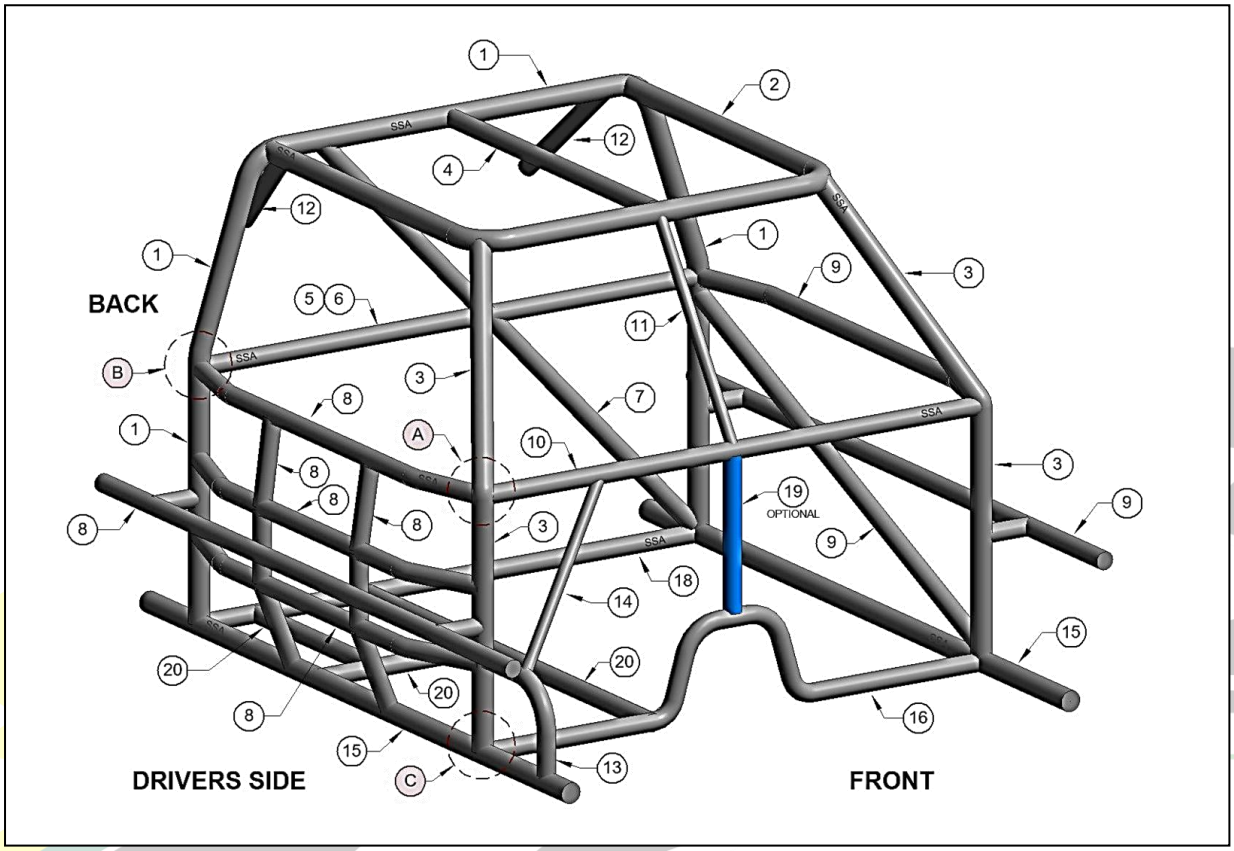

Fig 3 (ii)

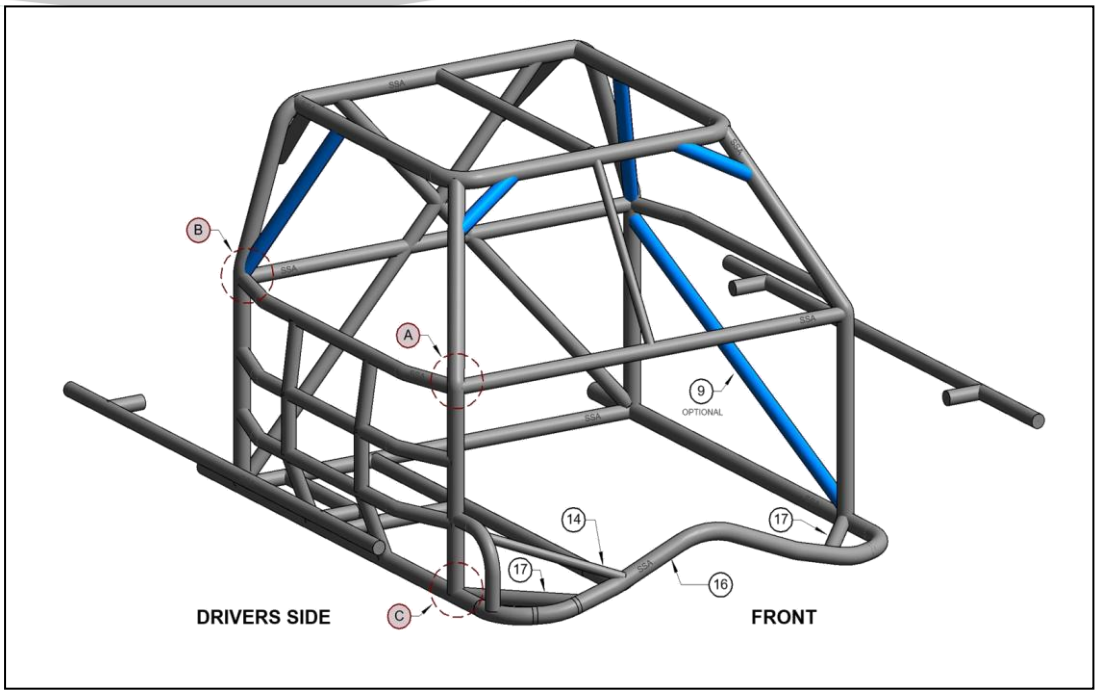

ROLL CAGE – Material and Design Option Effective for Registration commencing 1 July 2021

Fig 3 (iii)

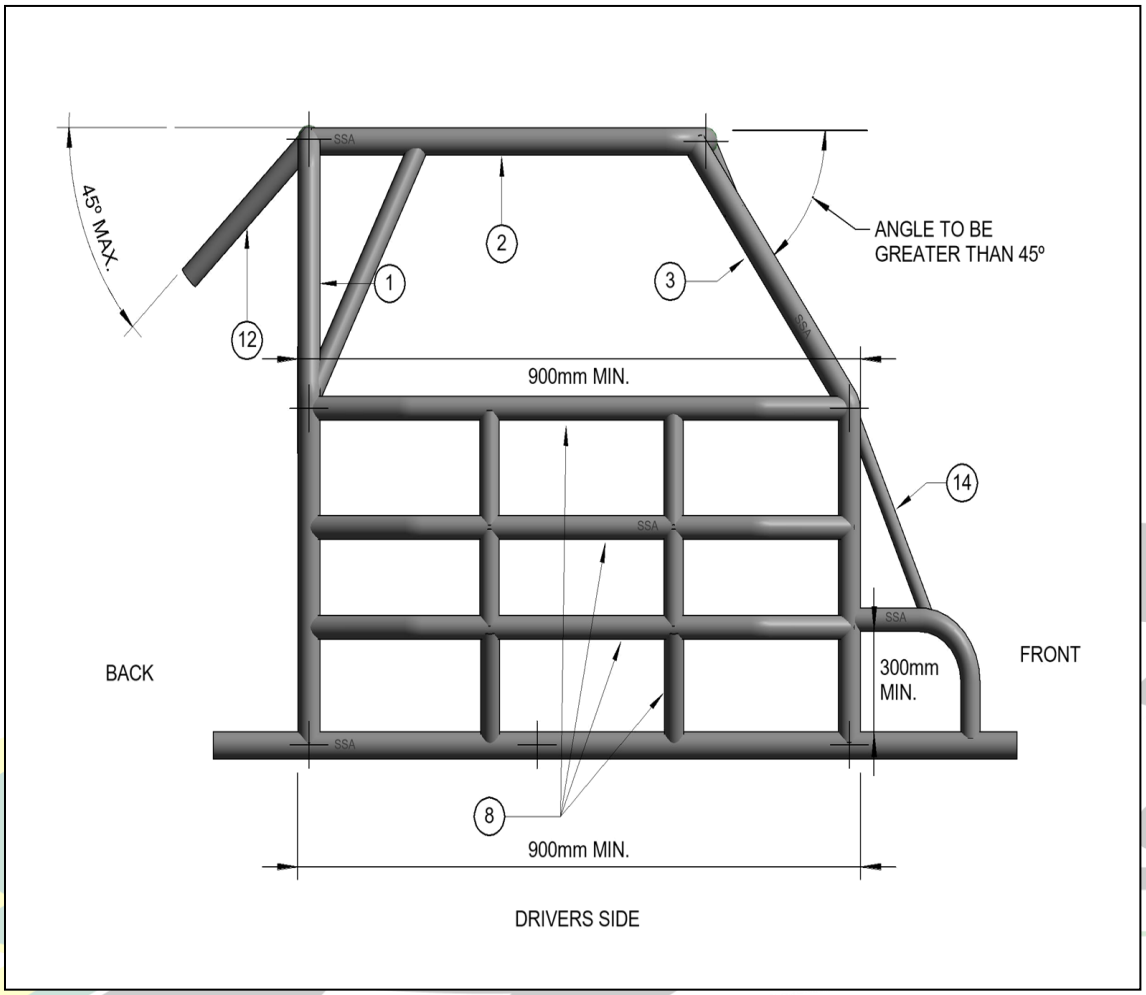

Fig 3 (iv) a

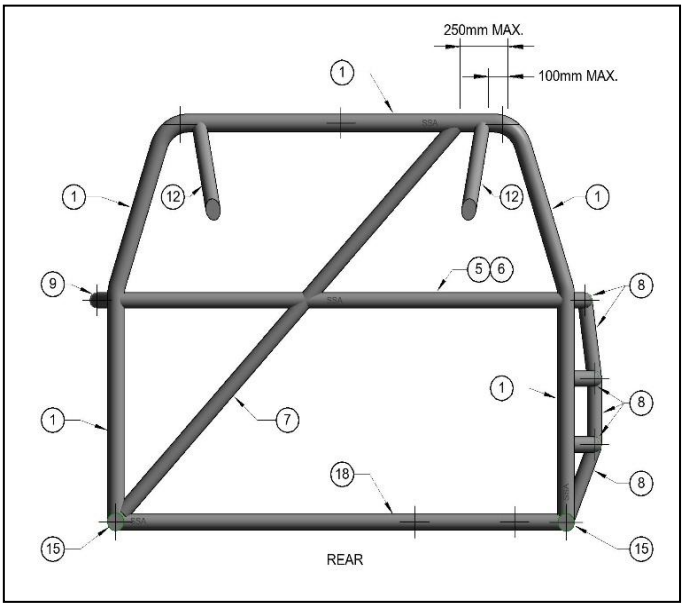

Fig 3 (iv) b

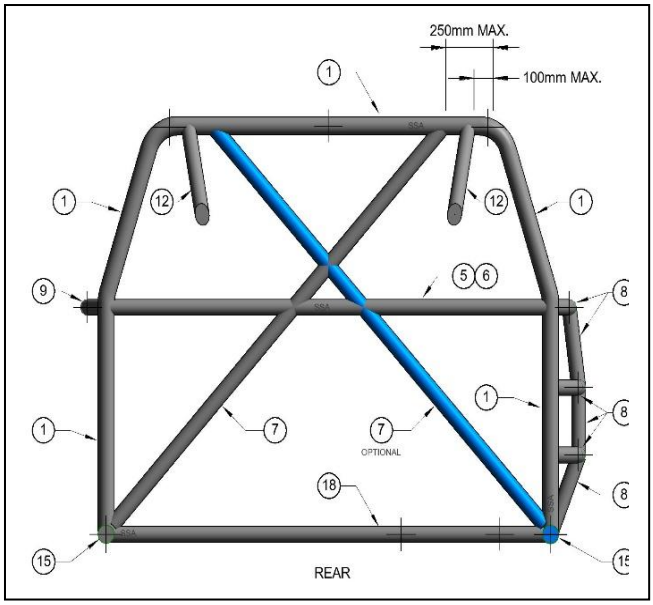

ROLL CAGE – Material and Design Option Effective for Registration commencing 1 July 2021

1. **Main Hoop Bar**: Bar #1
The rear main hoop will be made of one continuous length of tubing. See Fig 3(i). Hoop to be within 50mm of sides of roof at the narrowest point, be within 50mm of the inside line of the 'B Pillar' measured at point 'B' of Fig 3 (i) and be completely inside the body line. The base of the hoop will be fitted square in the car. If the Main Hoop requires bending to meet the 50mm requirement at point 'B' then the bend can only be formed within 50mm of this point. The distance between the rear of the main hoop and the front of the A pillar front leg at the intersection with the sub frame rail and at rear of the main hoop and front A pillar leg at the intersection of top NASCAR bar to be minimum of 900mm.

2. **Roof Hoop Bar**: Bar #2
Option 1: To be formed from one continuous length of tubing and be welded to the Main Hoop Bar (Bar #1) on each side of the roll cage. This bar incorporates the Top Windscreen Bar. The windscreen part of the Roof Hoop Bar to be no further rearward than 200mm from the front pinch weld lip of the front windscreen opening at narrowest point. Inner roof turret header panel may be notched ONLY where interference with the roof halo bar (bar #2) occurs. (01/07/23)

Option 2: To be formed using the top part of the Front A Legs (option 2) and be welded to the Main Hoop Bar (Bar #1) on each side of the roll cage. A Windscreen bar is to be fitted and welded between the two A Legs Bars and be no further back than 200mm from the front pinch weld lip of the front windscreen opening at narrowest point. Inner roof turret header panel may be notched ONLY where interference with the roof halo bar (bar #2) occurs. (01/07/23)

3. **Front A Legs/A Pillar Bar: Bar #3 (01/07/2020)**
GENERAL

a) The A Pillar part of the front legs MUST BE GREATER THAN 45º (See Fig 3(iii))
b) Be no further rearward than 300mm (250mm for Junior Sedans) behind and 50mm inwards of the OEM door opening at points A & C. Refer Fig 3 (i). The pinch weld is to be used as the reference point for measuring horizontally from a line between the A Pillar and the B Pillar at windowsill height. (01/07/23)
c) When bending this bar to meet the sub frame rail the bend must be within 50mm of Point A. Refer Fig 3 (i). (When using option 1 or 2)

Option 1 - Two front legs shall be formed from one continuous length of tubing and be welded to the sub frame rail (Bar #15) at the bottom at point C and the front corners of the Roof Hoop Bar (Bar #2) at the top.

Option 2 - Two front legs shall be formed from one continuous length of tubing and be welded to the roll cage sub frame (Bar#15) and continue up as the A Leg and be bent toward and welded to the Main Hoop Bar (Bar#1).

Option 3 – **Dash Hoop Bar and Roof Hoop Bar**. This requires the A Pillar/Front Leg to be formed in two straight pieces. Lower A Pillar/Front Leg to be welded to the Roll Cage Sub Frame bar (Bar #15) at Point C and to the Dash Hoop Bar at Point A. Upper A Pillar/Front Leg to be mounted upwards from Point A to the Roof Hoop Bar and be welded to the front corners of the one-piece Roof Hoop Bar (Bar #2). If using 38x2.6mm tube as the Dash Hoop Bar, the A Pillar/Front Legs will be notched to fit around this tube and be fully welded on all sides. The two pieces of the A Leg must intersect at the same point on the Dash Hoop Bar bend.
The Dash Hoop Bar is the combination of Bars #8, #9, #10 – in one continuous piece.

ROLL CAGE – Material and Design Option Effective for Registration commencing 1 July 2021

ALL A-LEG AND ROOF HOOP OPTIONS MUST BE CONSTRUCTED SO AS THE DRIVER CAN ENTER AND EXIT THE CAR THROUGH THE DRIVERS SIDE WINDOW APERTURE AT ALL TIMES. A-LEGS AND OTHER ROLL CAGE BRACING THAT PROTRUDE THROUGH THE DRIVERS SIDE WINDOW APERTURE THAT SIGNIFICANTLY IMPEDE THE DRIVER'S ABILITY TO ENTER OR EXIT THE CAR WILL BE DEEMED NON-COMPLIANT.

4. **Centre Roof Bar**: Bar #4
A one-piece centre roof bar to be welded between the main hoop and the roof hoop, in the centre line of the roll cage.

5. **Main Hoop Centre Spreader Bar**: Bar #5
Main Hoop Centre Spreader Bar: Bar #5 A one-piece straight bar/or two-piece if Diagonal bar is one piece is to be fitted to the Main Hoop within 50mm of top NASCAR bar height at Point B. Refer to Fig 3 (i). To be connected to the other side of the Main Hoop within 50mm of the top passenger NASCAR door bar. This bar may act as the Seat Back/Shoulder Bar (Bar #6). (01/07/2020)

6. **Seat Back / Shoulder Harness Bar**: Bar #6
A one-piece mounting bar to be fitted to mount the seat and seat belts, to be positioned so that the belts are anchored a maximum of 300mm from the point at which the shoulder belts pass through the back of the seat. Top seat mount to be no further than 75mm lower than this bar.

7. **Main Hoop Diagonal Bar**: Bar #7
Main Hoop Diagonal Bar: Bar #7 A two-piece diagonal brace/or one piece if Main hoop spreader bar is two pieces will be fitted in the roll cage behind the driver's head, within 250mm of the bend and down to the point where it intersects the Main Hoop Centre Spreader Bar (Bar #5). From this point the second piece in the same plane and angle as the top diagonal brace will follow down to the point where the hoop joins the LHS Roll Cage sub frame base. Refer Fig 3 (i). A second diagonal brace may be fitted and may need to be in 3 pieces. All braces must intersect with the Main Hoop Centre Spreader Bar/Diagonal bar. (01/07/2020)

8. **NASCAR Door and Dropper Bars**: Bar #8
On the driver's side, three one-piece horizontal bars that will have a deflection/bend at each end of the bar which allows the NASCAR bars to be positioned towards the door skin and placed between front and rear cage legs, evenly spaced between window sill and roll cage sub frame. Top NASCAR door bar to be within 50mm of the window opening. The centre or bottom horizontal bar may run straight through, from front wheel arch to the rear wheel arch, and then have two separate pieces of 38 x 2.6mm CHS turning to the NASCAR bar connecting to the roll cage Main Hoop Bar and to the 'A Pillar' leg. There will be a minimum of two vertical dropper bars as close to evenly spaced as possible between the front leg, and the rear hoop for each of the openings created by the NASCAR bars, making a minimum of six vertical bars to be fitted. Refer to Fig 3 (i). OEM Door B pillar may be notched ONLY; not removed to allow fitment of bar work.

9. **Passenger Side Door and Dropper Bars**: Bar #9
Passenger side will have a minimum of two one-piece bars attached at the Front A pillar legs and the Main Hoop Bar. One of these must be horizontal at window sill height which will be at the same height as the top NASCAR bar on the driver's side. The second bar cannot be vertical. Top NASCAR door bar may be straight or deflect outwards. (01/07/21)

10. **Lower Windscreen Dash Bar**: Bar #10
A one-piece straight bar mounted horizontally between the Front A pillar legs must be fitted within 50mm at top NASCAR bar height.

ROLL CAGE – Material and Design Option Effective for Registration commencing 1 July 2021

11. Centre Windscreen Bar: Bar #11

A one-piece straight bar is to be fitted at centreline of cage at 90º to and between roof hoop (bar #2) and the lower windscreen bar (bar #10).

12. Rearward Brace Bars: Bar #12

GENERAL

Both rearward brace bars options must connect to the rear of the main hoop within 100mm of the centre of the bend and extend rearward at a maximum angle of 45º down from the horizontal attaching to the rear subframe rails or a rear subframe chassis spreader.

Option 1 – two one-piece rearward brace bars free of bends.

Option 2 – a crucifix design with one bar being two pieces. The one-piece bar must be attached to the driver's side. All 3 bars to be free of bends. (01/07/2020)

13. Foot Protection Bar: Bar #13

When driver's feet are forward of the front roll cage A pillar leg (bar #3) in race position i.e. accelerator is at W.O.T. (wide open throttle) foot protection is mandatory. See Fig 3 (iii)

Foot protection bar is to attach to the Front A pillar legs (Bar #3) no lower than 300mm from the roll cage sub frame base (bar #15). To be measured from the top of the foot protection bar to the base of the roll cage sub frame. To protrude forward toward the front firewall / RHS front wheel well and re-attach to the roll cage sub frame base (Bar #15) to protect the driver's feet in the event of side intrusion. See Fig 3 (iii) (01/07/21)

Foot protection area to be completely filled with either 3mm mild steel or 5mm aluminium plate. See Fig 3 (iii)

When using a bolt in removable foot protection plate, it is to be attached to the outside of the foot protection bar using a minimum of 4 x 50x50x3mm (square) or 4 x 55x40x6mm (rectangular) mild steel tags attached no further than 200mm apart with 8mm or 5/16" bolts facing inward, with no protrusions. The larger the foot protection area, the more tags required. Multi hole or scalloped tags are NOT permitted.

14. Foot Protection Support Bar: Bar #14

The foot protection bar is to be braced to substantial bar work to the left. This is to prevent the collapse of the foot protection bar in the event of side intrusion. See Fig 3 (i)

15. Roll Cage Sub Frame Bar: Bar #15

Roll cage sub frame bar to be securely welded to body shell at a minimum of 4 points; 2 on each side of car, at a distance no closer together than 500mm. If using the 50x50x2.5mm RHS option, roll cage legs may be inserted into the RHS and fully welded.

OPTION: It is permissible to use a one-piece sub frame rail and spreader bar, joined in the centre of the vehicle at the transmission tunnel. Join must use a spigot/sleeve and be plug welded at two locations on both sides of the join with the join fully welded. If the spreader bar part of this option is more than 200mm forward of the A Pillar leg then a support brace (Bar #17) of a minimum 38x2.6mm CHS is to be fitted from the spreader bar to a point no less than 200mm from the front A pillar leg. Refer Fig 3 (ii)

16. Lower Spreader Bar Front: Bar #16

A sub frame spreader bar at front A pillar legs bar to be fitted. 200mm is the maximum distance forward or rearward before a brace is required (Bar #17). No spreader bars that have any deflection shall be allowed if they are under any seating. That is deemed to be any area from the front edge of the seat to the rear

edge of the seat base for all seats fitted to the vehicle. (01/07/21) Refer also to Option above in Item #15.

17. Lower Spreader Bar – Front Brace: Bar #17
If bracing is used must be a minimum of 38x2.6mm CHS and be fitted from the spreader bar to a point no less than 200mm from the A pillar front leg. Refer to Option in Item #15. Refer Fig 3 (ii)

18. Lower Spreader Bar Rear: Bar #18
A sub frame spreader bar to be fitted at the base of the Main Hoop Bar (Bar #1). This bar is to be as straight as possible. It is permitted to notch the body shell/transmission tunnel for the fitment of this bar in an endeavour to keep it as straight as possible. If the bar is bent to allow for the transmission tunnel it must be braced vertically to the centre of the centre spreader bar with 25x2.6mm CHS.

19. Lower Windscreen / Dash Bar Support (optional): Bar #19
A bar can be fitted between lower windscreen/dash bar and the front spreader bar.

20. Seat Base Mounting/Harness Mounting Bar: Bar #20
A fabricated or formed tubing frame for the mounting of seat base and harness will consist of the following options as a minimum. Tubing may be bent to accommodate fitment.

It is not permitted to drill through these bars for the mounting of seat base without the fitment of sleeves. Refer to image. The use of tabs made out of 3mm minimum mild steel are recommended. All harness tabs to be as per specification. Refer to Class Technical Manual for tab specification.

21. Rear Chassis Sub Frame Rail: Bar #21
Rearward of the roll cage to where sub frame rails intersect with the rearward brace bars and incorporate bumper supports and mounts are to be either 44.45 x 2.6mm CHS or 38x2.6mm CHS or 40x40x2.5mm RHS or 40x40x3mm RHS or 50x50x2.5mm RHS. Rearward sub frame bars to be symmetrical to the common centreline of the car. (01/07/21)

22. Front Chassis Sub Frame Rail – OPTIONAL: Bar #22
Forward of the roll cage to where sub frame rails intersect with and incorporate bumper supports and mounts are to be 38x2.6mm CHS or 40x40x2.5mm RHS or 50x25x3mm RHS.

23. Additional Optional Roll Cage Supports/Bracing:
Other additional optional roll cage supports or braces are permitted and are to be a minimum of 25x2.6mm CHS.

24. Windscreen Mesh: Mesh screen is to cover the entire area from A Pillar front leg (Bar #3) to Centre Windscreen (Bar #11) and from top of dash panelling to Roof Hoop Bar (Bar #2).
(i) Maximum effective mesh size 50x50mm mild steel. Mesh gauge 3mm.
(ii) Windscreen mesh to be welded or clamped with metal clamps to the roll cage A Pillar front leg (Bar #3) and Centre Windscreen bar (Bar #11).
(iii) Minimum of 4 (four) clamps.
(iv) Mesh may be welded to body of Mono cars.

ROLL CAGE – Material and Design Option Effective for Registration commencing 1 July 2021

25. Anti-Spear Plates: 3mm steel or 5mm aluminium (NOT to be lightened by any means)

a) The anti-spear plates to be mounted to the outside of the NASCAR bars and overlap the edge of the NASCAR bar work.

b) Recommended 1/3 length between roll cage legs, to be fitted on the driver's side, from base of roll cage to top NASCAR bar, forward of the first vertical door dropper bar to the front leg of the roll cage.

c) If using 3mm steel, plate/plates to be fully stitch welded. (01/07/23)

d) If using a single 5mm alloy plate, it must be bolted on using a iminium of 6 – 50x50x3mm (square) or 55x40x5mm (rectangular) mild steel plate tags/plates. (01/07/23

e) If using 3 individual 5mm alloy plates, they must be bolted on using a minimum of 4 – 50x50x3mm (square) or 55x40x6mm (rectangular) mild steel tags/plates per piece. (01/07/23)

f) Tags/plates to be solid square or rectangular with one hole only for the mounting point. (01/07/23)

g) All alloy plates must be bolted on using a minimum of 8mm or 5/16" high tensile bolts with no protrusions. (01/07/23)

26. FUEL TANK PROTECTION BAR: Bar #26 (01/07/2020)

Bar must be constructed of minimum 38x2.6mm CDS or 40x40x3mm RHS with 25x2.6mm CDS minimum angled brace bars to be fitted on each side and be 25mm clear all-around tank and filter, projecting a line from the rear wheel centre to the bar.

Note - only applicable to dual registered Street Stocks and require a Fuel Tank Protection bar.

27. HEAD PLATE

A minimum of 50mm clearance is required between the helmet, including fresh air intakes and associated fixtures, to any part of the head plate and roll cage when the driver is seated and harnessed. (01/07/2020)

All steel and aluminium head plates are to cover in full the opening above driver/passenger. To extend from roof hoop (bar #2) on the outside to the centre bar (bar #4), front roof hoop (bar $2) to main hoop (bar #1). Cutting off corners or any lightening of any form is NOT permitted. (01/07/23)

REMOVABLE STYLE

a) Head plate to be of 5mm aluminium or 3mm mild steel (NOT to be lightened by any means).

b) Plate to be mounted from above and be proud of main hoop (bar #1), centre roof bar (bar #4) and side of roof bar (bar #2) as per Fig 4, with 10 mild steel Plate Tabs of 50x50x3mm (square) or 55x40x6mm (rectangular) will be required when using a removable Head Plate.

c) Plate to be mounted, from above, with 10 x 8mm dia. High Tensile bolts, with lock nuts/locking devices fitted, 3 each side, 2 front, 2 rear. Heads of bolts to be downwards and spot welded e.g., no protrusions. (01/07/23)

d) Plate tabs to be solid square or rectangular with one only hole for the mounting bolt.

Fig 4 Head Plate

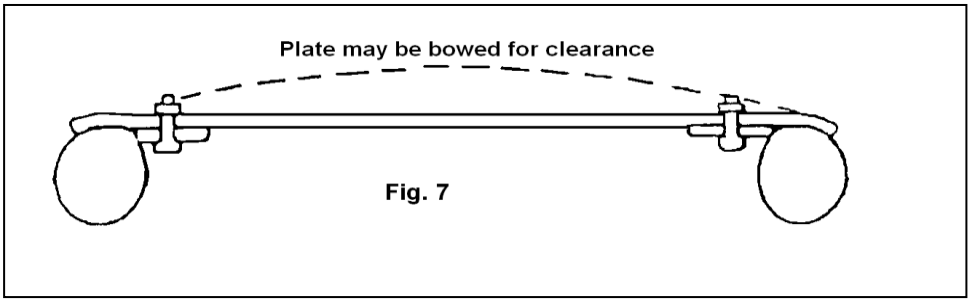

NON-REMOVABLE STYLE

A full size 3mm mild steel head plate may be fully welded to top of Main Hoop bar (Bar #1), centre roof bar (Bar #4) and side of roof bar (Bar #2) using practice as outlined in General Item g).

ROLL CAGE – Material and Design Option Effective for Registration commencing 1 July 2021

CHASSIS

MATERIAL SPECIFICATION

A. Minimum Cold Drawn Seamless (CHS) mild steel tube with a minimum tensile strength of 350 MPA. Unless otherwise specified. (01/07/2020)

B. Where RHS is permitted all tube to be mild steel with a minimum tensile strength of 350 MPA

MINIMUM DIMENSIONS

As per Section 2 Roll Cage - MINIMUM DIMENSIONS TABLE except for VEHICLES WITH ORIGINAL OEM FRONT CHASSIS RAILS REMOVED IN FRONT OF FIREWALL. See Below: (01/07/2020)

A. 50x50x2.5mm RHS

B. 40x40x3mm RHS (01/07/2020)

C. 44.45x2.6mm CHS

GENERAL (01/07/2020)

1. Front and rear chassis rails to be built to a professional and safe standard with adequate bracing 38x2.6mm CHS maximum. The rear chassis rails must be no further vertically than 300mm from the foot of the main hoop and be either stepped down to connect with chassis/roll cage at a point in line with the main hoop or connected to main Roll Cage hoop and be adequately braced.
2. A crush zone must be also constructed between front bumper and front chassis rails minimum 150mm.
3. The bar work between the chassis rails from within the engine bay to the rear of the boot compartment, other than minimum bar work is free using up to maximum chassis bar material.
4. Except for the bumper, bumper support bars, chassis to A pillar roll cage leg and suspension mounting points, all bars work outside the front chassis rails to be a maximum of 25x2.5mm RHS or 25x2.6mm CHS. Suspension points may be fabricated using chassis bar materials as a maximum.

VEHICLES WITH ORIGINAL OEM FRONT CHASSIS RAILS REMOVED IN FRONT OF FIREWALL

1. If original front chassis rails are removed forward of front fire wall a fabricated chassis stepped and angled down minimum 75mm when viewed from the side elevation to create a crush zone to be fabricated using A. 50x50x2.5mm RHS or B. 40x40x3mm RHS or C. 44.45x2.6mm CHS. See figure 3(iv). (01/07/2020)
2. Chassis bars to be either under, through or above the floor. If through the floor the floor must be professionally welded to chassis rails and sealed. The chassis rails must be connected to the roll cage base at a minimum of 4 points to include fore and aft using chassis bar material and be adequately braced/gusseted to prevent collapse of chassis/cabin area.
3. As a minimum the front chassis rails to be braced to the A pillar roll cage leg no lower than 400mm from the roll cage sub frame rail 38x2.6mm CHS. If joining RHS to RHS the joint is to be plated (Fish plate) using a minimum of 40x2.5mm x 40mm *minimum* flat mild steel plate. (01/07/2020)

Note – These are the minimum standards and all times the construction must be built to a safe and professional standard.

ROLL CAGE – Material and Design Option Effective for Registration commencing 1 July 2021

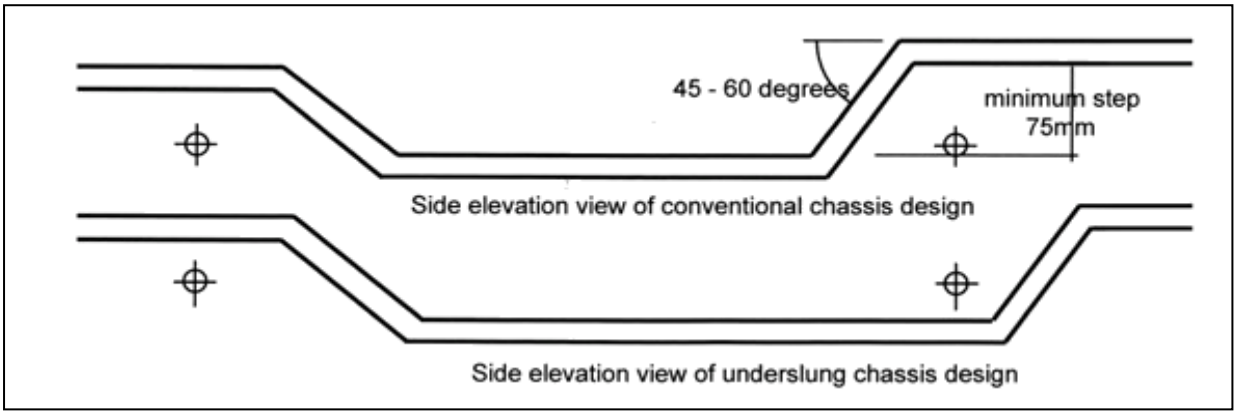

Underslung Chassis Design

2a. ROLL CAGE for cars built and registered using original Roll Cage Material and Design (01/07/22)

Fig 3(i) details the minimum structural requirements. Each item number is referred to in the text below.

The roll cage is to prevent the collapse of cabin area under impact, all bar work must be entirely inside the OEM glassed area of the cabin.

Roll cage, to enclose the driver, to be full width and full height of the cabin area. The roll bars are to constitute a cage type framework, braced fore and aft. The cage must extend from behind driver's seat forward to the windscreen area and incorporate protection for the driver's feet.

All roll bar material must be of good quality mild steel, AS1450, minimum Gr300. MINIMUM 38mm O.D. x 3.0mm w.t. CHS. Sonic testing to be performed only on a straight section of tube. It is the owner's responsibility to remove paint/powder coating if required. (Sonic test at not less than 2.70mm ABSOLUTE). Aluminium based materials not permitted. All bends to be made using a pipe bender with the correct size former, with no evidence of crimping, wall failure, or significant weakening. Galvanised tubing or welding over threaded tubing is not permitted in any structural bar work. (01/07/23)

Water pipe fittings or malleable fittings are not permitted. Roll cages built using other than fusion welding techniques will not be accepted. Gussets on welded joints may be required at daylight inspection of weld quality.

**** - items as marked are relevant to cars built for competition in National 4's only and are applicable to cars first registered on or after 1st July 2016. All cars previously registered (evidence may be required) must meet the last printed version of the specification manual 2011 and updates.*

MINIMUM DIMENSIONS TABLE (01/07/23) (Bar #11 corrected 24/04/24)

Bar #1	Main Hoop	38x3mm O.D.	CHS
Bar #2	Roof Hoop	38x3mm O.D.	CHS
Bar #3	Front Legs / A Pillar	38x3mm O.D.	CHS
Bar #4	Centre Roof Bar	32x3mm O.D.	CHS
Bar #5	Rear Diagonal – single Rear Diagonal – crucifix 2nd bar	38x3mm O.D. 32x3mm O.D.	CHS CHS

Bar #6	Seat Back/Shoulder Belt Bar	38x3mm O.D.	CHS
Bar #7	Door Bars – RH Side	38x3mm O.D.	CHS
Bar #8	Door Bars – LH Side	38x3mm O.D.	CHS
Bar #9	Lower Windscreen/Dash Bar	38x3mm O.D.	CHS
Bar #10	Centre Windscreen Bar	25x3mm O.D.	CHS
Bar #11	Rearward Brace Bars	34mm O.D.	CHS
Bar #12	Foot Protection Bar	38x3mm O.D.	CHS
Bar #13	Sub-Frame	38x3mm O.D. 50x50x3mm 50x50x5mm	CHS RHS Angle
Bar #14	Spreader Bars	38x3mm O.D. 35x35x3mm	CHS RHS
Bar #15	Quarter Window Bar	25x3mm O.D.	CHS
Bar #16 - Optional	Lower Windscreen/Dash Bar	25x3mm O.D.	CHS
Bar #17	Foot Protection Support Bar	25x3mm O.D.	CHS
Bar #18	Dropper Bar	38x3mm O.D.	CHS
	Windscreen Mesh	50x50x3mm	Mesh
	Anti-Spear Plates	3mm Steel 5mm Aluminium	
	Head Plate	3mm Steel 5mm Aluminium	
POINT A	The point where top NASCAR door bar (Bar #7/8), A pillar leg (Bar #3) and lower windscreen dash bar (Bar #9) intersect – Refer Fig 3 (i)		
POINT B	The point where the top NASCAR door bar (Bar # 7/8), Main Hoop (Bar #1) and Seat Back/Shoulder Belt Bar (bar #6) intersect – Refer Fig 3 (i)		
POINT C	The point where sub frame bar (bar #13), base of A pillar leg (Bar #3) and lower spreader bar – front (Bar #14) intersect – Refer Fig 3 (i)		

1. **Main Hoop**: The rear main hoop will be made of one continuous length of tubing. See Fig.3 (i). Hoop to be within 50mm of sides of roof at the narrowest point, be within 50mm of the inside line of the B pillar measured at point B of Fig. 3 (i), and be completely inside the body line. The base of the hoop will be fitted square in the car.
   *** Main hoop must be a minimum distance of 20% of the wheel base measurement forward of rear axle centreline. This will be measured horizontally between the centre line of the main hoop/sub frame intersection and centreline of rear axle. See Fig 3 (ii)

2. **Roof Hoop**: The roof hoop will be formed from one continuous length, or alternately be replaced by using one continuous length to form the front leg A pillar bar, which then continues back to the rear hoop, with a top windscreen bar being fitted to complete the hoop. The roof hoop to be within 50mm of the roof at sides, and as close as practical to the windscreen opening, and be welded to the main hoop to form a halo around the driver's head.

3. **Front Legs / A pillar**: The two front legs are to be formed each from a continuous length, and be welded to the roll cage base (bar 13) and the roof hoop (bar 2) or if using the second option for the roof hoop, welded to the main hoop (bar. 1). A third option is: The top NASCAR bar, lower windscreen bar and passenger's top NASCAR bar may be formed in one continuous bar. This entails the front leg to be formed in 2 pieces. One from the roll cage base to this hoop with the upper section from this hoop upwards to the roof hoop. Inner roof turret header panel may be notched ONLY where interference with the roof halo bar (bar #2) occurs. (01/07/23)

ROLL CAGE for cars built and registered using original Roll Cage Material and Design

*** The top part of all options must join the roof hoop in the general area of the front windscreen opening and follow downwards to point A of Fig. 3 (i) at an angle of minimum 45 degrees to 65 degrees maximum downward from the horizontal and be no further behind than 300mm and 50mm inwards of the OEM door opening at points A & C of Fig 3 (i).

4. **Centre Roof Bar**: Centre roof bar to be minimum of 32x3mm CHS, and shall be welded between the main hoop and the roof hoop, in the centre line of the roll cage.
   .
5. **Rear Diagonal**: A one-piece diagonal brace, minimum 38x3mm CHS will be fitted in the roll cage hoop, behind the driver's head, within 250mm of the bend, and down to the point where the hoop joins the L/H cage base as per Fig 3 (i). A second brace may be fitted in cruciform. If cruciform type bracing is used, a minimum of 32x3mm CHS may be used.

6. **Seat Back/Shoulder belt Bar**: A 38x3mm CHS mounting bar to be fitted to mount the seat and seat belts, to be positioned so that the belts are anchored a maximum of 300mm from the point at which the shoulder belts come through the back of the seat. Top seat mount to be no further than 75mm lower than this bar.

7. **NASCAR Bars**: On the driver's side, three horizontal bars that will resemble the drawings provided. They are to have a deflection/bend at either end of the bar which allows the Nascar bars to be positioned towards the door skin and placed between front and rear cage legs, evenly spaced between window sill and roll cage sub frame. Top NASCAR door bar to be within 50mm of the window opening for all cars registered after 1st July 2016. The centre or bottom horizontal bar may run straight through, from front wheel arch to rear wheel arch, and then have two separate pieces of 38x3mm CHS turning to the NASCAR bar connecting to the roll cage main hoop and to the front leg. There will be a minimum of two bars evenly spaced between the front leg, and the rear hoop for each of the openings created by the NASCAR bars, making a minimum of six bars to be fitted. Refer to Fig 3 (i). (01/07/17)
   *** The distance between the rear of the main hoop and the front of the A leg at the intersection with the sub frame rail to be a minimum of 900mm.

8. **Door Bars**: Passenger side will have a minimum of two bars fitted between the front leg and the main hoop. One of these must be horizontal at window sill height. Top NASCAR door bar may be straight or deflect outwards. (01/07/21)

9. **Lower Windscreen/dash bar**: A 38x3mm CHS bar between the front legs must be fitted at top NASCAR bar height. Refer also to front leg options (3). As an option a bar (16.) can be fitted between lower windscreen/dash bar and the front spreader bar.

10. **Centre Windscreen Bar**: A 25x3mm CHS minimum bar, to be fitted at centreline of cage, between to roof hoop, and the lower windscreen bar.

11. **Rearward Brace Bars**: Two rearward brace bars minimum 34mm CHS to extend from top rear of main hoop down onto the rear sub frame (approx. 45 degrees). They may form a crucifix and must be attached to the rearward side of the main hoop within 100mm of the centre of the bend.

12. **Foot Protection Bar**: When drivers' feet are forward of the front roll cage leg (bar #3) in race position. I.e. accelerator is at W.O.T (wide open throttle) foot protection is mandatory. See Fig 3 (iii)

    Foot protection bar is to be of 38x3mm CHS minimum and is to attach to the front roll cage leg (bar #3) no lower than 300mm from the roll cage sub frame base (bar #13). To be measured from the top of the foot protection bar to the base of the roll cage sub frame. To protrude forward toward the front firewall / RHF wheel well and re-attach to the roll cage sub frame base (bar #13) to protect the drivers' feet in the event of side intrusion. See Fig 3 (iii) (01/07/21)

ROLL CAGE for cars built and registered using original Roll Cage Material and Design

The foot protection bar is to be braced (bar #17) to substantial bar work to the left and is to be a minimum of 25x3mm CHS. This is to prevent the collapse of the foot protection bar in the event of side intrusion. See Fig 3 (i)

Foot protection area to be completely filled with either 3mm MS or 5mm aluminium plate. See Fig 3 (iii)

When using a bolt in removable foot protection plate, it is to be attached to the outside of the foot protection bar using a minimum of 4 x 50x50x3mm (square) or 4 x 55x40x6mm (rectangular) MS tags attached no further than 200mm apart with 8mm or 5/16" bolts facing inward, with no protrusions. The larger the foot protection area, the more tags required. Multi-hole or scalloped tags are NOT permitted. (16/09/17)

13. **Sub Frame:** Roll cage legs shall be welded to the top of a sub-frame of 38x3mm CHS, 40x40x3mm RHS, or 50x50x3mm RHS section running fore and aft. Sub-frame to be securely welded, or bolted to the floor pan/sills using at least four 12mm steel bolts through the sub-frame and using 100x100mm plates under the floor.
    *** NOTE: Cars previously registered with 50x50x5mm angle iron can continue to be registered.

14. **Spreader Bars:** A minimum of two sub frame spreader bars at roll cage legs, either 38x3mm CHS or 35x35x3mm RHS to be fitted. 200mm is the maximum distance forward or back, from the front leg of roll cage, for fitment of the spreader bar, before a brace may be required. No spreader bars that have any deflection shall be allowed if they are under any seating. That is deemed to be any area from the front edge of the seat to the rear edge of the seat base for all seats fitted to the vehicle. (01/07/21)

15. **Quarter Window Bar:** A quarter window bar (bar.15) if required because of excessive rake or a long roll cage or for previously registered cars (prior to 1st July 2016) where the A leg is less than 45 degrees to horizontal, be fitted to both sides installed from the top NASCAR bar to top half of the "A" pillar bar, using a minimum of 25x3mm CHS.

16. **Lower Windscreen/ Dash Bar Support:** As an option a bar (16) can be fitted between lower windscreen/dash bar and the front spreader bar.

17. **Foot Protection Support Bar:** A bar (17) minimum 25x3mm CHS will attach from the foot protection bar at one end, and the other end to bar work to the left.

18. **Dropper Bar**: On the passenger side a 38x3mm CHS bar will be required between the top nascar bar (bar 7) or the door bar (bar 8) and the base bar (bar 13) if the quarter window bar is fitted. (01/07/17)

19. **Windscreen Mesh**: Mesh screen to cover entire area from "A" pillar to centre bar and from dash to roof bar.
    i) Maximum effective mesh size 50x50mm mild steel. Mesh gauge 3mm. (16/09/18)
    ii) Windscreen mesh to be welded, or clamped with metal clamps to the roll cage "A" pillar and centre windscreen bar.
    iii) Minimum of four clamps.
    iv) Mono cars may be welded to body.

Anti-Spear Plates: 3mm steel or 5mm alloy, (NOT to be lightened by drilling).
i) The anti-spear plates to be mounted to the outside of the NASCAR bars and overlap the edge of the NASCAR bar work. (01/07/17)
ii) Recommended 1/3 length between roll cage legs, to be fitted on the driver's side, from base of roll cage to top Nascar bar, forward of the first vertical door dropper bar to the front leg of the roll cage.
iii) If using 3mm steel, plate/plates to be fully stitch welded. (01/07/23)
iv) If using a single 5mm alloy plate, it must be bolted on using a iminium of 6 – 50x50x3mm (square) or 55x40x5mm (rectangular) mild steel plate tags/plates. (01/07/23
v) If using 3 individual 5mm alloy plates, they must be bolted on using a minimum of 4 – 50x50x3mm

ROLL CAGE for cars built and registered using original Roll Cage Material and Design

(square) or 55x40x6mm (rectangular) mild steel tags/plates per piece. (01/07/23)

vi) Tags/plates to be solid square or rectangular with one hole only for the mounting point. (01/07/23)

vii) All alloy plates must be bolted on using a minimum of 8mm or 5/16" high tensile bolts with no protrusions. (01/07/23)

Passenger Option: Roll cage left side must mirror right hand side and have full cruciform. Passenger handle for support, optional.

Fig. 3 (i)

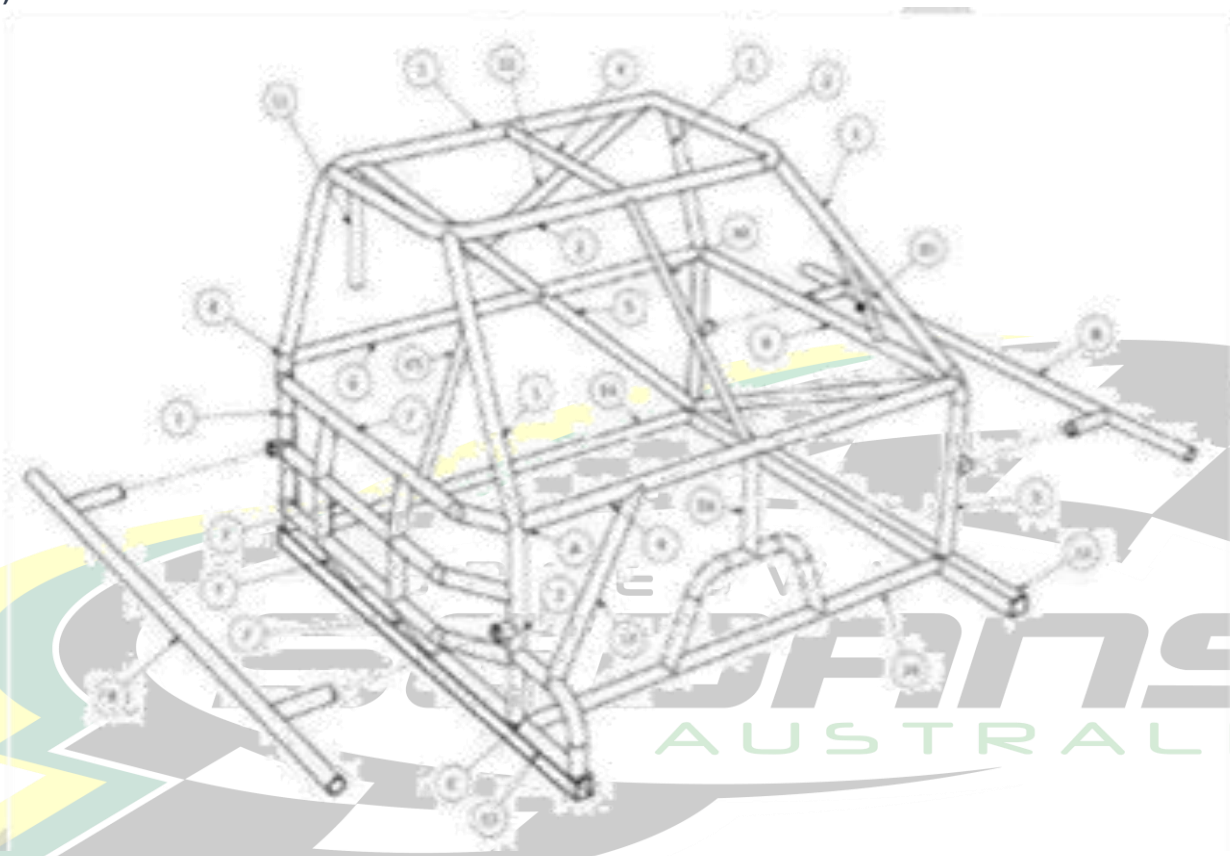

Fig. 3 (ii)

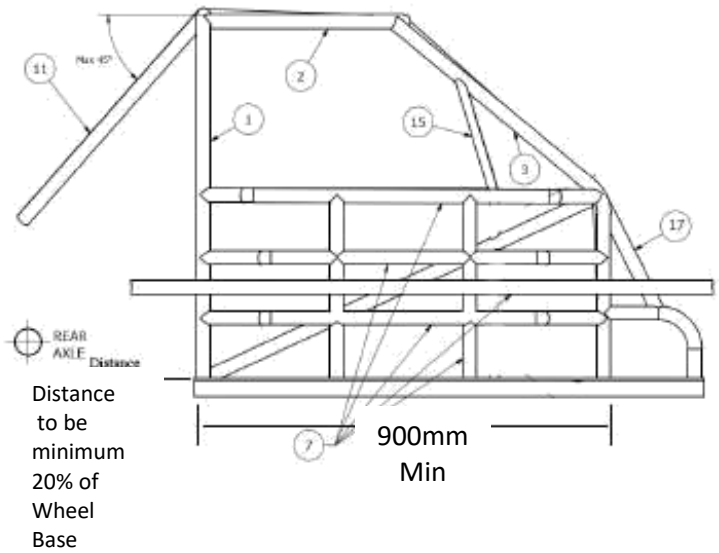

ROLL CAGE for cars built and registered using original Roll Cage Material and Design

Fig. 3 (iii)

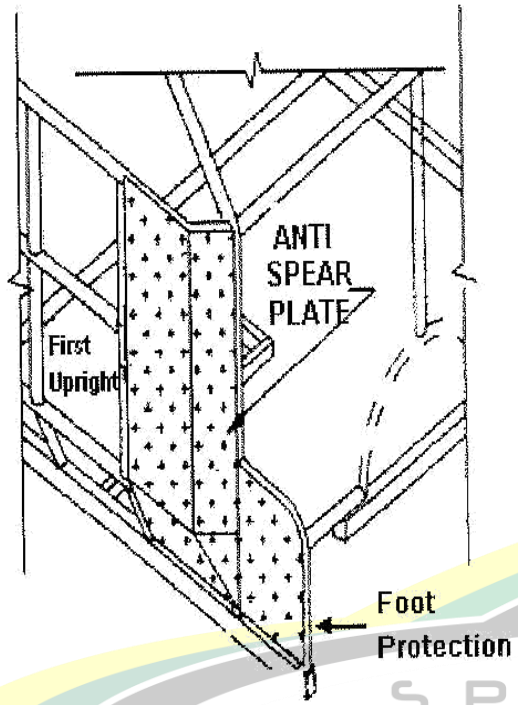

Fig. 3 (iv)

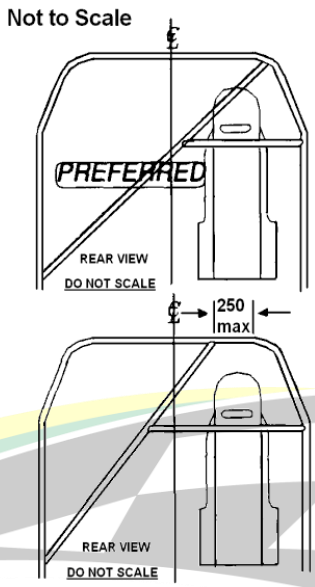

Fig 3a – Alternate Roll Cage Design (24/11/18)

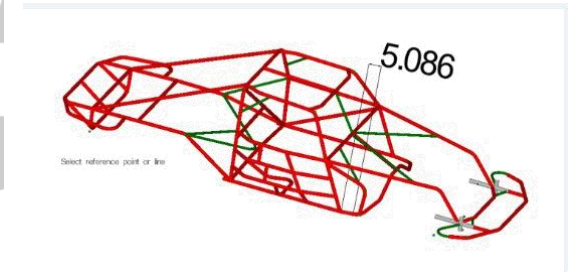

HEAD PLATE:

A minimum of 50mm clearance is required between the helmet, including fresh air intakes and associated fixtures, to any part of the head plate and roll cage when driver is seated and harnessed. (01/07/2020)

All steel and aluminium head plates are to cover in full the opening above driver/passenger. To extend from roof hoop (bar #2) on the outside to the centre bar (bar #4), front roof hoop (bar $2) to main hoop (bar #1). Cutting off corners or any lightening of any form is NOT permitted. (01/07/23)

a) Head plate to be of 5mm ALUMINIUM ALLOY or 3mm STEEL. 25x3mm FMS strip to be welded full length to main hoop, top windscreen bar, centre roof bar and side roof bar.
b) The use of 10 mild steel Plate Tabs of 50x50x3mm (square) or 55x40x6mm (rectangular) will be required when using a removable Head Plate.
c) Plate to be mounted, from above, with 10 x 8mm dia. High Tensile bolts, 3 each side, 2 front, 2 rear. Heads of bolts to be downwards and spot welded e.g. no protrusions. (01/07/17)
d) To simplify the removal of an injured driver it is highly recommended that a removable full-size head plate be used: Fig. 4.
e) Plates/tags to be solid square or rectangular with one only hole for the mounting bolt. (01/10/16)

ROLL CAGE for cars built and registered using original Roll Cage Material and Design

Fig 4. Head Plate

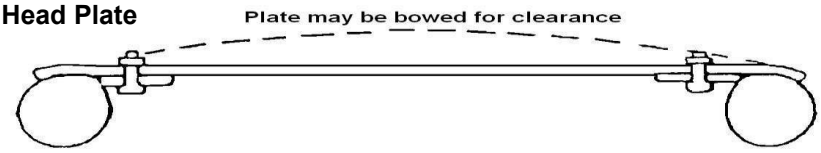

ALTERNATIVELY

a) A head plate min. 3mm steel must extend from rear roll bar to top windscreen bar and from driver's side outer roof bar to centre roof bar.
b) This plate must be securely welded to these bars with intermittent welding procedure.

Helmet clearance including fresh air intakes and associated fixtures, between roll cage roof/hoop bars for existing vehicles, may raise head plate as per drawing below, to obtain 50mm clearance. (01/07/2020)

Fig. 4(i)

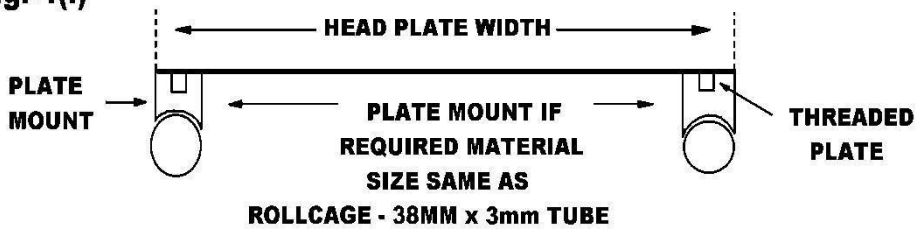

Mounting procedure for raising of head plate (existing cars). 10 stubs 38x3mm tube – stub length is determined by height required to gain 50mm clearance. Stubs to be end capped and threaded for mounting purposes.

CHASSIS:

Cars previously registered prior to the 1st July 2016 will fully comply with the relevant Specification Book, with that being the last printed version of the National 4 Cylinder Sedan Specification Manual 2011.

CHASSIS BAR MATERIAL SIZE:

a) 38x3mm CHS
b) 42x3mm CHS
c) 40x3mm RHS
d) 50x50x2.5mm RHS

1. Chassis material to be a MINIMUM AS/NZ 1163 Standard 300 MPA minimum. Front and rear chassis rails to be built to a professional and safe standard with adequate bracing 38x3mm CHS maximum. The rear chassis rails must be no further vertically than 300mm from the foot of the main hoop and be either stepped down or connected to main Roll Cage hoop and adequately braced.

2. A crush zone must be also constructed between front bumper and front chassis rails minimum 150mm.

3. The bar work between the chassis rails from within the engine bay to the rear of the boot compartment, other than minimum bar work is free using up to a maximum chassis bar material.

4. Except for the bumper, bumper support bars, chassis to A pillar roll cage leg and suspension mounting points, all bars work outside of the front chassis rails to be a maximum of 25x25x3mm RHS. Suspension points may be fabricated using chassis bar material as a maximum.

VEHICLES WITH ORIGINAL FRONT CHASSIS RAILS REMOVED IN FRONT OF FRONT FIREWALL

1. If original front chassis rails are removed forward of front fire wall a connecting front and rear chassis

ROLL CAGE for cars built and registered using original Roll Cage Material and Design

stepped and angled down a minimum 75mm when viewed from the side elevation to create a crush zone must be fabricated using 40x40x3 RHS or 50x50x2.5 RHS. Connecting chassis bars to be either under or above floor. See figure 3 (iv) The chassis rails must be connected to the roll cage base at a minimum of 4 points to include fore and aft using chassis bar material and be adequately braced from the to the A pillar roll cage leg no lower than 400mm from the roll cage sub frame 38x3mm CHS maximum.

Note - These are the minimum standards and at all times the construction must be built to a safe and professional standard.

BALLAST (17/09/2022)

ATTACHMENT OF BALLAST IS TO BE BOLT-ON ONLY

a) Each individual piece of ballast MUST be PAINTED white ONLY and be permanently marked with registered car number and prefix of the car the ballast is attached to.
- (i) Ballast is to be attached to substantial bar work or roll cage ONLY.
- (ii) Ballast permanently attached to roll cage, bar work or body via welding, clamping, or any other permanent attachment method is NOT permitted. This includes welding of attachment hardware (bolts).

b) Ballast attached to substantial bar work that is RHS is to be use one of the below attachment methods ONLY
- (i) Sleeves inserted in bar work with a minimum of two (2) ½" or 12mm high tensile bolts, washers and nyloc nuts with a minimum of two (2) threads protruding.
- (ii) A 5mm plate minimum of 100x50mm to a maximum of 200x75mm with a minimum of two (2) ½" or 12mm high tensile bolts, washers and nyloc nuts with a minimum of two (2) threads protruding.
- (iii) A minimum of two proprietary ballast type clamps. i.e. Allstar, Bicknell, AFCO etc. Accessory type clamps NOT permitted.
- (iv) Rated leaf spring shackle type U-bolts, with washers and nyloc nuts with a minimum of tow (2) threads protruding.

c) Ballast attached to roll cage or substantial bar work that is 44.45mm or 38mm CHS is to use one of the below attachment methods ONLY
- (i) Sleeves inserted in bar work with a minimum of two (2) ½" or 12mm high tensile bolts, washers and nyloc nuts with a minimum of two (2) threads protruding.
- (ii) A minimum of two proprietary ballast type clamps. i.e. Allstar, Bicknell, AFCO etc. Accessory type clamps NOT permitted.
- (iii) Rated leaf spring shackle type U-bolts, with washers and nyloc nuts with a minimum of tow (2) threads protruding.

d) ALL BALLAST IS TO ATTACH SEPERATELY USING ONE OF THE ABOVE PERMITTED METHODS PER PIECE OF BALLAST. I.E. STACKING OR USING THE INVERTED SIDE OF BALLAST CLAMPS IS NOT PERMITTED

e) Ballast is not to be attached any higher than top NASCAR bar.

f) Ballast attached to fuel tank protection bar or supports is NOT permitted.

g) Ballast attached to bumper bar or supports is NOT permitted.

h) MAXIMUM singular piece of ballast to be no more than 11.5kg ABSOLUTE.

i) MAXIMUM total ballast to be no more than 46kg ABSOLUTE.

j) Ballast that is non-compliant in both weight and attachment may incur an infringement and penalty notice.

3. BUMPER BARS & OPTIONAL EXTERNAL BARWORK:

a) OEM type Steel bumper bars **NOT** permitted but may be replaced with max. 38x3mm CHS.

b) Front chassis bars may mount to sub frame rail or may be mounted through the centre of the sub frame rail and extend to either roll cage leg or sub frame cross brace at floor level and mounted back to the sub frame. Front bumper may be mounted to 2 front chassis bars.

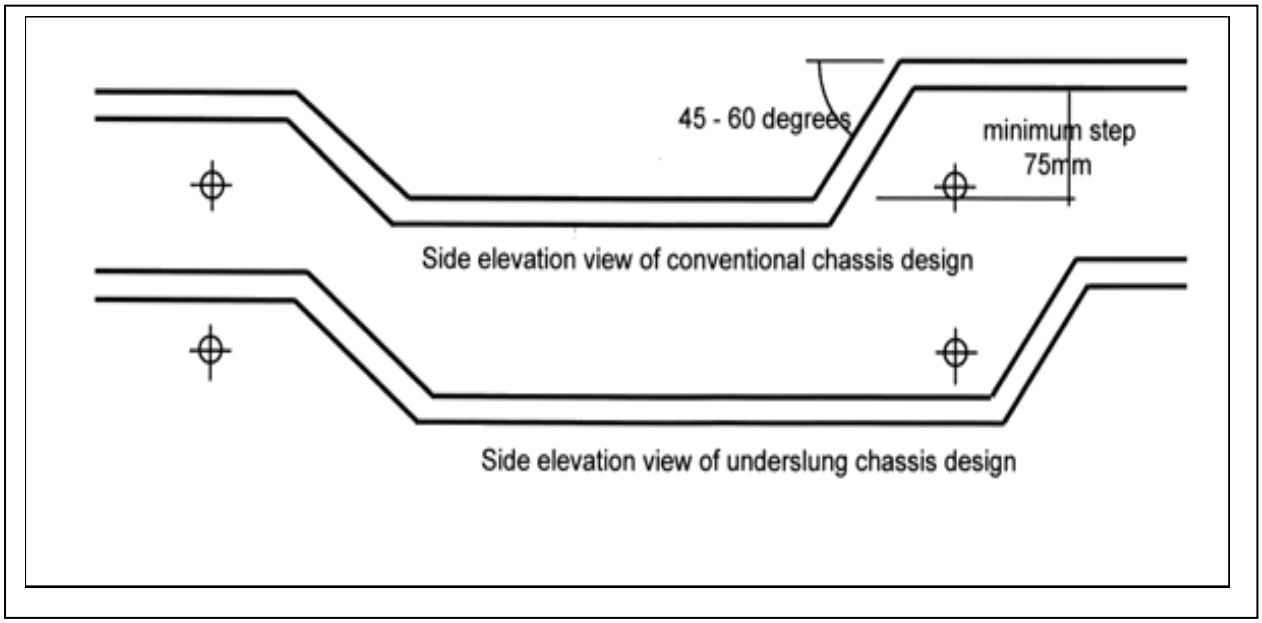

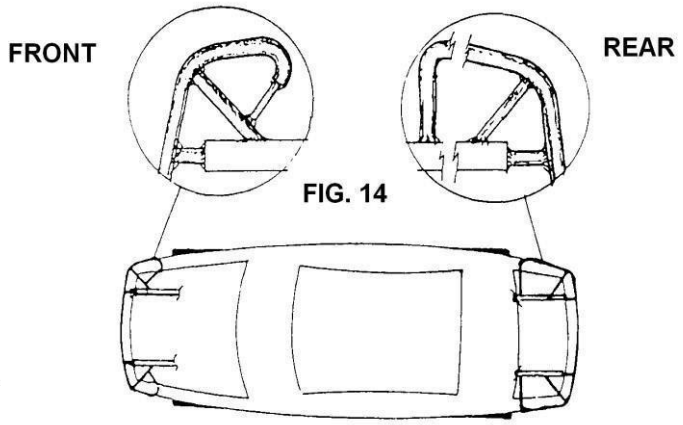

FIG. 14

c) Front stay/strut support bars maximum 38x3mm CHS may attach to dash bar and or roll cage leg to chassis bars.

d) Rear bumper must be mounted to rear chassis bars.
   i) Returns of rear bumper may be extended as a skid rail within 50mm of the outside body between bumper and wheel arch, and then extend inward to the chassis bar.
   ii) Bumper may extend maximum 50mm from inside edge to existing body line.
   iii) Bumpers may be maximum 42mm CHS bumper corners minimum 100mm radius and have a maximum of four (4) mounting points.

e) A crumple zone (light tube) may be used beyond the intersection of the rear brace bars and fuel tank protection bar, to attach the bumper bars to the chassis bars.

f) Anti-hook-up bars from returns of Front and Rear bumpers to be extended onto the chassis bars. Corner Plates on top edges of either bumper not Permitted.

g) **FRONT & REAR BUMPER BAR**
   i) May be covered with a plastic road car bumper.
   ii) Optional copy of fibre glass bumpers front and rear are allowed. To be exact copy of O.E.M Bumper for model.
   iii) Plastic bumper cover must be fitted with round head bolts.
   iv) Aluminium rubbing strips optional. 40x3mm maximum aluminium strip may be fitted between bolts to

support bumper cover.

v) For purposes of maintaining 100mm clearance of any bracing from rear of bumper tubes; rear of bumper tubes is determined as the inner side of the tubes of both front and rear bumpers. (14/09/19)

h) **SKID RAILS** (01/07/23)

Skid Rails are an optional fitment on an SSA National 4. They are to be attached between front and rear wheel arches. Skid rails on rear quarter panels behind rear wheels are NOT permitted.

GENERAL

(i) Skid rails are to be either 25x25x3mm mild steel RHS or alternatively 50x12mm nylon or urethane. Nylon or urethane option will be attached as per option 1.

(ii) Skid rail to be attached to body and inner rub rail support with a minimum of 4 evenly spaced attachment points.

(iii) Inner skid rail supports are to be a minimum of 25x25x3mm mild steel RHS or 25x3mm CHS and both ends must return to roll cage or bar work using a minimum of 3mm thick material. Whether an outer skid rail is used or not. Any barwork in the cabin area outside of the main roll cage be that forward or rearward of the roll cage that projects toward the door will be classed as inner skid rail. (01/07/23) regardless of whether either outer skid rail option is used or not to avoid a hook up point in the event of door panel damage.

(iv) Skid rail attachment bolts are to be of round head, cup head, cap screw type hardware and must be a minimum of 8mm.

(v) Attachment bolt heads must be external to outer rail wall and must insert horizontally through both outer rail and inner rail support, clamping together with door panel between the two rails.

Option 1

(i) Outer skid rail ends must be closed and taper to 45º so as to not become a tear point.

(ii) Attachment bolts at each end of outer rail must be within 50mm from each end of rail.

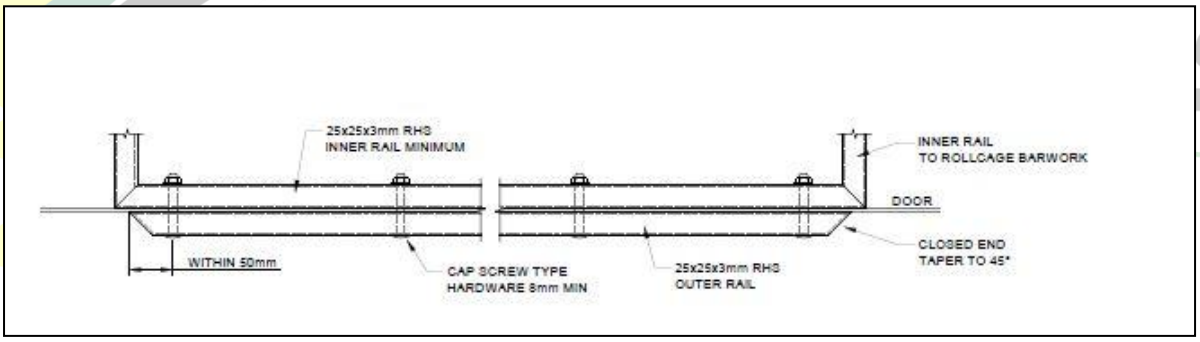

Option 2

(i) Outer skid rail ends must have a radius formed end as not become a tear point.

(ii) Outer radiused ends must return through a hole in door panel and be securely attached to a receptacle type spigot on roll cage or bar work.

(iii) These two radiused ends will be classed as two attachment points.

(iv) An additional two attachment points of outer rail must be as per specification listed in GENERAL above.

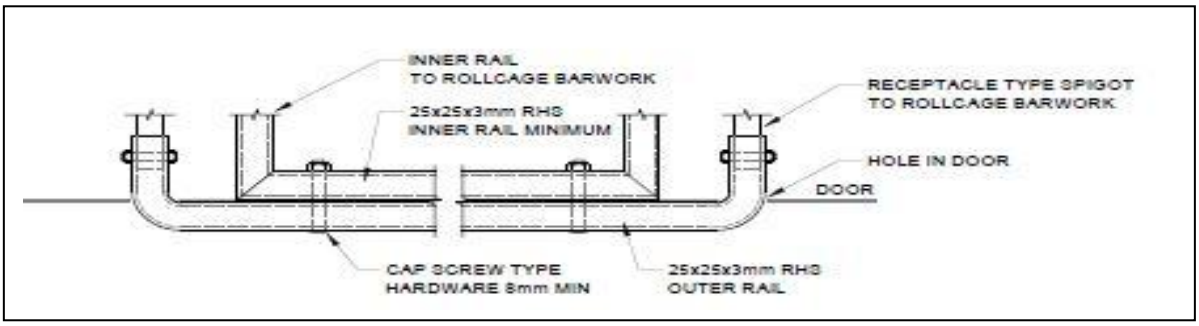

i) **REAR OVERRIDE BAR:** An override bar may be used. Constructed of maximum 25x3mm O.D. CHS it shall be no wider than the boot panel and shall be mounted centrally on the bumper bar at no more than four points, be VERTICAL and be max 100mm high. Brace bars are not to be used.

j) **FRONT OVERRIDE BAR:** An override bar may be used. Constructed of maximum 25x3mm O.D. CHS Maximum 600mm long, 150mm high and mounted centrally on top of bumper at three points only, i.e. it may have a centre support. Fig. 7.

k) **TOWING STRAPS – Optional – (01/07/2020)**
   (i) Tow straps are to be of wire rope cable or nylon webbing.
   (ii) Tow straps can be attached to front and rear over ride bars.
   (iii) Tow straps can be accessible through a hole in the front and rear bumpers.
   (iv) Tow straps are recommended to allow a disabled vehicle to be towed.

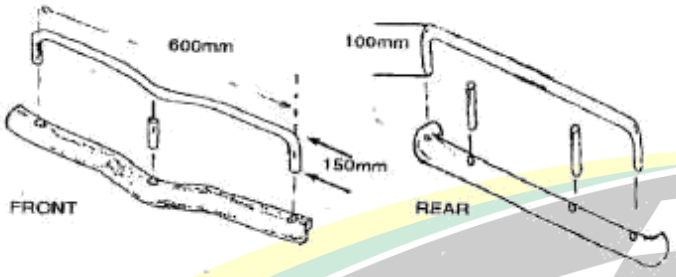

4. ENGINE

i) The car owner/driver is to have current copy of daylight form/s with logbook at all times.
ii) Engine Sealing is NOT required.
iii) No forced induction
iv) No Motorcycle engines permitted
v) No rotary engine
vi) 4 Cylinders maximum

a) Engine capacity open four cylinder. Engine block may be changed but must be from a vehicle manufacturer listed in the approved vehicle tables. (e.g., Ford block allowed in BMW vehicle). Engine components directly associated with its function are free. (01/07/21)

b) Multiple carburettors allowed.

c) FUEL INJECTION
   i) After market computers allowed
   ii) Engine capacity open four cylinder
   iii) Multiple throttle bodies allowed
   iv) Inlet manifold is open
   v) One injector per cylinder only
   vi) Radio telemetry TO or FROM a car or cars will not be permitted
   vii) Ignition open

d) Manufacturer's markings to remain on engine block castings.

e) If resilient engine mountings are used, a 6mm wire cable or 6mm chain restraint must be fitted.

f) Remote filters coolers, etc. to be isolated from driver by a 0.9mm firewall, mounted securely below door height, as to not impair vision through cabin.

g) All connecting hoses, couplings etc. to be correct class of fittings for that purpose.

h) Remote oil pump permitted. External oil feeds to bearings permitted.

i) Return springs must be fitted to each butterfly shaft (in-built springs accepted), and one spring to accelerator pedal linkage. Protective wire gauge or air cleaner to be fitted over air intake to prevent entry of foreign objects to the throttle body and also to act as a flame trap.

5. BATTERY AND ELECTRICAL SYSTEM:

a) Battery to be securely mounted in a box or steel frame secured to roll cage or bar-work.

b) The battery and terminals to be covered with non-conductive cover if battery is in cabin area to prevent spillage

c) When battery mounted within the cabin area - to be held down by an angle iron/steel/aluminium frame MINIMUM 25x25x3mm both top and bottom. (01/07/23)

d) Regardless of the location, the battery will be mounted with a minimum of 2 x 8mm / 5/16" bolts or rods. (01/07/23)

e) Maximum size battery permitted is N70ZZ and one only permitted. (01/07/16)

f) Suitable grommets must be fitted where electrical cables pass through metal firewalls.

g) At the commencement of a meeting car must be capable of starting with starter motor.

h) Switches: Ignition switch and electrical fuel pump switch, if fitted, must be grouped together and be clearly marked.

i) An engine 'KILL' switch, suitably marked for method of operation should be of lever/twist type, located centrally and forward of the windscreen mesh. This switch must isolate the battery, and any other electrical item. E-stop type switches that utilise a rotating release function are permitted and are highly recommended. (12/01/24)

j) Electrical switches NOT to be mounted through the floor.

k) Electrical wiring not to be attached to fuel lines.

l) All electric fuel pumps in EFI cars to be controlled by an engine monitoring relay, to stop fuel pump running when engine stops.

m) The use of data logging dashes be permitted. Traction control is strictly PROHIBITED. (01/07/21)

BATTERY CLAMP/HOLD DOWN FRAME

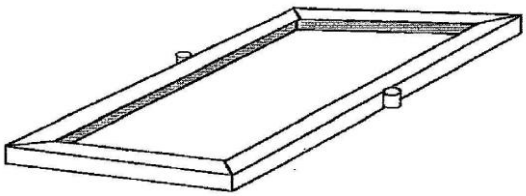

FRAME: 25 X 25 X 3mm ANGLE IRON

Fig. 8

6. EXHAUST SYSTEM:

a) Exhaust must be within local noise level requirements. Recommend. 95. Dba.

b) All exhaust gases are to be directed away from all drivers, fuel tanks and tyres.

c) Internally ducted exhaust system shall vent through the body not higher than 100mm above the door sill panel, using a slip joint as in Fig.9

d) Driver is to be suitably insulated from the exhaust system. Sheeting to cover exhaust to be a minimum 50mm gap.

e) Exhaust system to have not more than two outlet pipes, not to protrude beyond body line.

f) If exhaust system is under floor, safety chains will be fitted to front and rear of pipes and secured to floor pan or sub-frame.

g) Pipes and mufflers must be securely attached to the vehicle.

h) Any car exhausting excessive unburned fumes while on dummy grid, or being formed up on the track, may be excluded as this constitutes a health hazard.

Internal Exhaust Duct Body Vent

Fig.9

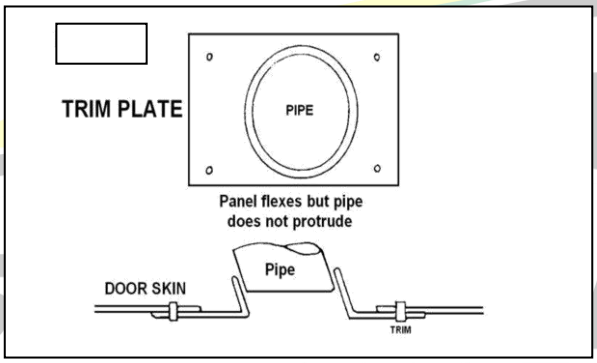

7. COOLING SYSTEM:

a) Cooling system may be modified.

b) All radiator hoses to be of fabric reinforced material, plain rubber hoses not permitted.

c) Radiators may be mounted inside cabin provided that they are mounted as low as possible in the rear of the vehicle rearward of the roll cage main hoop and suitably isolated from the driver. If radiator is mounted in boot area, outlets may come from side of radiator tank and drivers must be protected by a firewall. (01/07/16)

d) If car uses interior deck sheeting (Super Sedan style) then radiator may be mounted forward of rear hoop but must be under sheeting. If radiator is mounted in front of Main Hoop under sheeting and in the rear within the decking (Super Sedan Style) with outlets facing downwards then the requirement to have the outlets facing to the rear is not required. (24/11/18)

e) The upper half of rear window opening MUST NOT be obscured by the rear radiator. Radiator ducting shroud if used maximum of 600mm forward of the radiator and must not be more than half the rear window height.

f) Cabin mounted radiators: (01/07/2020)

(i) That are of a crimped-on plastic tank or Copper soldered construction MUST have BOTH tanks covered to protect driver and others in event of tank becoming dislodged or damaged.

(ii) Proprietary or custom fabricated radiators that are of Aluminum construction that have tanks TIG welded onto core, e.g., AFCO, KENCO, KEYSER, PWR etc DO NOT require tanks to be covered.

(iii) All radiators MUST have radiator cap completely covered.

(iv) Water spray bars or jets are NOT permitted.

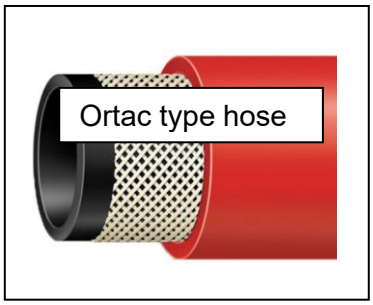

g) Pipes leading to the radiator are to be one of the following (01/07/2020)

- steel,
- aluminum,
- copper material,
- Nonconductive reinforced Ortac type hose,
- PTFE Hose.

All cabin internal pipes are to be ducted or lagged with suitable material.

Stainless steel externally braided hose is accepted e.g. Earls, Speedflow, ProFlow etc that utilise the correct JIC or A/N Dash type fittings that have been professionally installed as per correct fluid transfer practice are not required to be ducted or lagged.

h) Hoses to be as short as possible and fitted to radiator from rear side.

i) Exposed hoses or joints not permitted in cabin area.

j) Cabin mounted fans to have shroud or suitable guard.

k) Cabin mounted water pumps that are of a plastic construction MUST be lagged or covered with a suitable guard that protects driver and others in the event of pump becoming damaged. (01/07/2020)

l) Cooling system to have a manual pressure relief cap fitted. Lever vent type caps may be used. Tube to be fitted to direct steam to the ground.

m) The use of radiator expansion tanks is limited – Maximum 2 litres

8. TRANSMISSION/DRIVELINE:

ELECTRONIC TRACTION CONTROL NOT PERMITTED.

Every race car is to be fitted with a clutch so that the engine may be started and then the vehicle be put into gear and move off in forward or reverse as required.

a) Gearbox must have a minimum of two forward gears and a reverse gear.

b) No quick-change differentials permitted.

c) Aluminium banjo centre allowed. Ratios are free.

d) Gearbox and differential changes permitted.

e) Tail shaft may be of one piece or two-piece types, conversion is optional.

f) No carbon fibre tail shafts allowed.

g) Tail Shaft Loops – must be fitted with 360º hoops at front and rear.

(i) Steel strap minimum. 40x3mm FMS or 6 mm chain or 6mm wire rope to be SECURELY fitted around the front and rear of the tail-shaft within 150mm of universal tunnel to prevent the tail-shaft and or shafts from dropping in an event of breakage. The top part of loop to be minimum 40x3mm FMS welded or bolted to floor pan/tunnel on either top or bottom. (01/07/2020)

(ii) If wire cable/chain is used the top/upper section (180º) part of the loop to have minimum 40x3mm flat mild steel (FMS) welded or bolted to floor pan/tunnel on either top or bottom. Flat mild steel (FMS) to be one piece from side to side at points that cable passes through floor including FMS. The wire cable/chain is to be retained securely on the 40x3mm FMS. (01/07/21)

(iii) If rear floor pan/tunnel removed; loop as per above minimum materials to be bolted or secured to bar work or differential housing. (01/07/2020)

(iv) If there is a joint in the middle of the tail shaft a third safety loop is required. (01/07/21)

(v) Tail shafts must have a fully operational constant velocity/universal joints, be suitable for the application and be correctly phased. (01/07/2020)

h) Scatter shield: All cars must fit a Scatter shield if not using a competition clutch or bellhousing. To be a minimum 3mm x 150mm wide and must cover the upper 180 degrees of bell housing and be securely attached to the bell housing or fire wall in engine bay or front fire wall in cabin area to protect the driver's feet and legs from clutch explosion.

i) Cars fitted with auto transmission and a torque converter must fit a Scatter shield.

REAR AXLE BEARING RETAINING RINGS. If using assembly not fitted with floating axles, a new retaining ring must be fitted at replacement of bearing or axle.
Ring must be an interference fit with the axle, when in place the retaining ring is to be tack welded using MIG or a small diameter low hydrogen rod on low amperage.

FAILURE TO OBSERVE THIS PROCEDURE WILL INCUR A PENALTY ESPECIALLY IF AN AXLE IS DISLODGED. (SAFETY DECLARATION)

WHEEL STUDS. Grade 8, 12mm minimum all vehicles

9. STEERING

a) Must be in sound condition. Steering joints to have locking devices fitted. i.e., split pinned, lock nuts etc (01/07/23)

b) Wire spoke or wood rim steering wheels not permitted.

c) Steering column to be securely mounted to the roll cage dash bar.

d) Hub of steering wheel to be padded with dense resilient foam and covered.

e) To reduce thumb and wrist injuries, the use of "PAW SAVER" type disc steering wheel is permitted.

f) Quick release steering wheels are mandatory. (01/07/21)

g) Modifications are permitted.

h) Steering quickner is permitted.

10. SUSPENSION:

OPEN:

To be built to a professional and safe standard. No beam axle assembly to be fitted to the front of the car.

11. WHEELTRACK: Fig 10

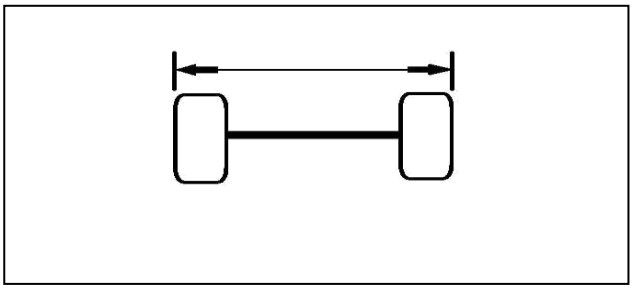

Original track plus 75mm maximum is allowed, Measured from the outside of one rim to the outside of the opposite rim. (Wheel/tyre measured at stub axle height and averaged front and back)
Measurements - (Table.4) - include 200mm for rim and bead lock to accommodate SSA Wheel Track measuring tool.

12. WHEELBASE:

Original, within 1% ABSOLUTE!

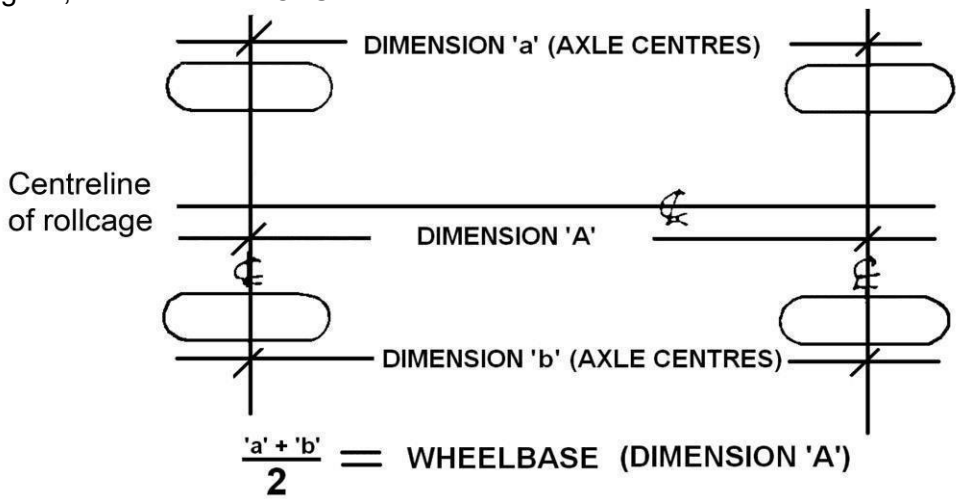

Method of measuring wheelbase shall be; with each front wheel pointing straight ahead. Measure distance from front axle centre to rear axle centre on each side of vehicle. Add dimensions for left and right and divide by 2, allowable tolerance is +/- 1%.

13. WHEELS:

a) Wheel rims free to be up to a maximum of 7 inches (180mm) in width and up to a maximum diameter of 17 inches.

b) Wheels must be in good condition and free from cracks.

c) Bead locks allowed. (See Fig. 11) (16/09/18)

d) If at any time a bead lock rim is measured using a calliper tool and found to be over 200mm the competitor may be asked to remove the tyre for measurement of the rim as per Fig 11 (16/09/18)

e) Wire wheels and/or dual wheels not permitted.

f) Balance weights to be securely fastened or taped.

g) Rim edges to be rolled or rounded off if rim protrudes past the tyre side wall.

h) Covering not to be welded to outer section of rim.

i) Wheels may be reinforced provided they meet with the approval of the State Technical Committee or the Chief Scrutineer.

"Mag" Wheels: -

i) Correct matching nuts and washers must be used. Wheel nuts/studs not to protrude past the outer face of the wheel when measured from bead to bead. (01/07/23)

ii) Composite type wheels NOT acceptable.

iii) Composite wheel means wheels made of different materials e.g. 3 piece alloy wheels are not classed as composite wheels

Fig 11

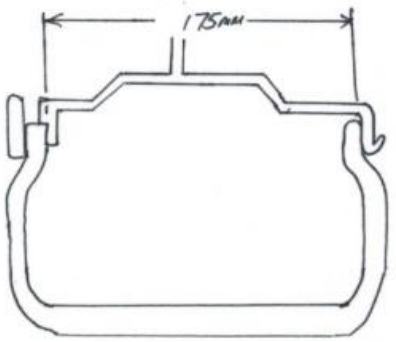

14. TYRES: (01/07/2020)

GENERAL

a) Tyres be in good condition.

b) All manufacturer's markings to be visible on side wall.

c) Grooving of tyres permitted.

d) Safety inner tubes permitted.

e) Any type of lubrication (Grease or oil etc) is not permitted on tyre side walls. (01/07/17)

f) Tyre shine type cosmetic products are permitted for application to side wall only.

g) The compliance of any permitted tyre can be reviewed at any time.

PERMITTED TYRES

a) Road Legal radial tyres.

b) Maximum side wall making width 235.

c) Maximum diameter 17 inch.

d) Tread wear rating of 200 and above as marked on side wall. Tyres with no tread wear marking may be used provided they meet all other specifications listed.

e) The tyre must have been listed or is listed in a road tyre section of the manufacturer's tyre catalogue and have been commercially available.

f) Road legal re-treaded tyres. Tyres must have the correct remoulder's speed rating etc and be legible as per AS 1973-1985.

NON-PERMITTED TYRES

a) Racing tyres.

b) Tyres that are road legal for use on Australian roads that have been exclusively designed and marketed for motorsport/competition use only.

IF IN DOUBT, PLEASE SEEK CLARIFICATION FROM SSA Inc TECHNICAL COMMITTEE

15. BRAKES:

Any car model produced where ABS brake system is available then that option may be used.

a) Foot operated hydraulic brakes to be fitted and be effective at race speeds
b) Brakes to be fitted to a minimum of three (3) wheels. Only right-hand front brake may be removed.
c) Adjustable braking allowed.
d) Disc rotors may not be altered by drilling of rotor surface (**Note**: some discs are supplied from the factory as drilled disc (i.e., DBA, Willwood)

16. FUEL:

THE USE OF COOLING SYSTEMS FOR FUEL IS NOT ALLOWED. Refer to Section 17 – Fuel Tank and Fuel System (01/07/23)

NITRO: the introduction into the combustion chamber/s of nitro fuels and/or additives, either in solid, liquid or gaseous form (e.g., nitrous oxide) by any means is expressly forbidden.

a) Unleaded, E85, avgas, or methanol only permitted.
b) Multi fuel pumps allowed.

Fuel shall be tested as per the SSA Inc. policies and procedures.

17. FUEL TANK AND FUEL SYSTEM:

a) Original fuel tank must be removed and replaced by a tank of up to 64 litres maximum capacity. For cars using methanol a tank up to 84 litres maximum is permitted.

b) Pressurised fuel tank/s NOT permitted.

c) Area beneath tank to be cut out, giving adequate ventilation and ensuring that spillage cannot remain in vehicle.

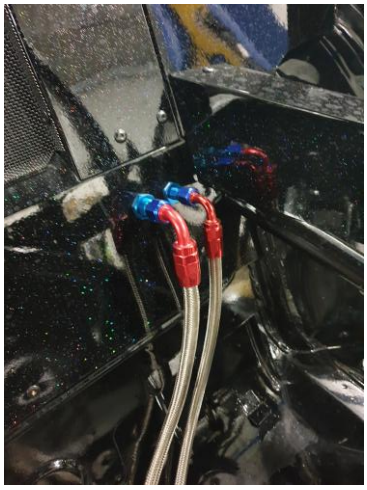

d) Fuel tank area is to be accessible for scrutineering. A 300x300mm access panel maybe in the rear parcel shelf, deck panel or the boot lid. Fuel tank is to be isolated from the driver by a minimum 0.9mm metal firewall. For all cars that do not have an OEM firewall to separate the fuel tank from the driver – the fuel tank must be fully enclosed – this includes the base as well as the sides and top. (14/09/19)

e) Filler cap to be a positive seal, behind a firewall and inside body. Levers on cam locked caps to be clipped.

f) Metal fuel tanks over 25 litres must be baffled. All joints are to be welded to a professional standard. Fuel tanks are to be constructed of min. l.0mm steel or 3.0mm aluminium alloy.

g) Competition type "plastic" tank permitted. The use of an approved type fuel cell and receptacle is recommended.

h) All fuel tanks may be covered/wrapped in insulation material product such as heat mat/wrap to deflect heat. This must be removable for inspection/testing when requested. (01/07/23)

i) All fuel tanks are to be constructed with pick-up fittings etc. coming from the top, bottom or side of tank.

j) If pump is placed in an existing tank, then low outlets are to be blanked off and outlet moved to the top.

k) A flexible fuel line section must be fitted within 75mm of fuel tank and all fuel lines to be securely fixed in position.

l) Barbed fittings of the correct size must be used in conjunction with screw type clamps when connecting flexible fuel line. (Genuine SAE R6 fittings and hose exempted).

m) Neoprene, reinforced plastic or black fuel line may be used. OEM type Bundy steel tubing may be used through the car or under the car. Flexible fuel lines can pass through cabin area. Bulkhead type fittings may be used where flexible fuel lines pass through front and rear firewalls as an alternative to grommets and are highly recommended. (01/07/2020)

n) High pressure lines are to use high pressure hose fittings.

n) **Carburettor and Mechanically Injected cars only**: The fuel line to the engine must be fitted with a quick action NON-LEAK fuel tap or valve in working order. The fuel tap, actuator or switch is to be mounted within easy reach of driver and crash crew, and clearly marked "FUEL" and the positions ON/OFF. Solenoid valves or remote mounted fuel taps are permitted.

o) If a return line is used, it must be fitted with a one-way valve. A fuel pressure regulator will suffice as a One-Way Valve. (01/07/16)

p) Electric fuel pumps must be wired with an independent earth. The pump MUST be controlled by the 'KILL' switch and if using EFI, by an engine monitoring relay. This device is highly recommended for carburettors.

q) Fuel lines passing through cabin area are to be secured and isolated from electrical wiring and be positioned in such a manner so as potential damage is avoided. (01/07/2020)

r) Tank to be securely mounted in the boot area of the car, on suitable bar work or on a frame mounted directly to the bar work. A minimum clearance of 150mm forward of the lower rear end of the boot panel and 300mm minimum from side of vehicle, and isolated from driver by a firewall. Fuel tank not to be mounted using brackets welded to tank or cell. Minimum strap size is to be 25x3mm FMS. Tank to be protected by substantial bar work on all sides. (01/07/19)

s) Tank to be securely mounted in the boot area of the car, in a suitable metal cradle attached to the bar work, with a minimum clearance of 150mm forward of the lower rear end of the boot panel and 300mm minimum from side of vehicle, and isolated from driver by a firewall.

t) Fuel tank not to be mounted using brackets welded to tank or cell. Minimum strap size is to be 25x3mm FMS. Tank to be protected by substantial bar work on all sides.

u) Fuel tank protection*:* Bar must be constructed of minimum 38x3mm CHS or 40x40x3mm RHS with 25x3mm CHS OD MINIMUM angled brace bars to be fitted on each side and be 25mm clear all-around tank and filter, projecting a line from the rear wheel centre to the bar. Effective for all cars from 1st July 2016. (24/11/18)

v) Bar is to prevent side entry to tank by nose of another vehicle. Protector must be 25mm lower than an underslung tank and mounted as per Fig.12 (Brace bars do not constitute Bumper mountings.)

w) The corners of the fuel tank protection bar are to be radius corners. No straight side pipes for jacking to extend.

x) Tank vents to be fitted with an anti-spill device.

y) Non underslung fuel tank is a fuel tank that has some portion above the bumper tube or chassis tube and therefore is to have a fuel tank protector bar fitted. Protector bar must be 25mm higher than a non-underslung tank and mounted as mirror of Fig 12. (Brace bars do not constitute Bumper mountings) Effective for all cars from 1st July 2016.

z) Underslung fuel tank is a fuel tank that is below bumper or chassis rails and therefore must have a fuel tank protector bar fitted.

aa) Plastic fuel tanks fitted with metal filler ring must be fitted with an anti-static earth wire. (01/07/23)

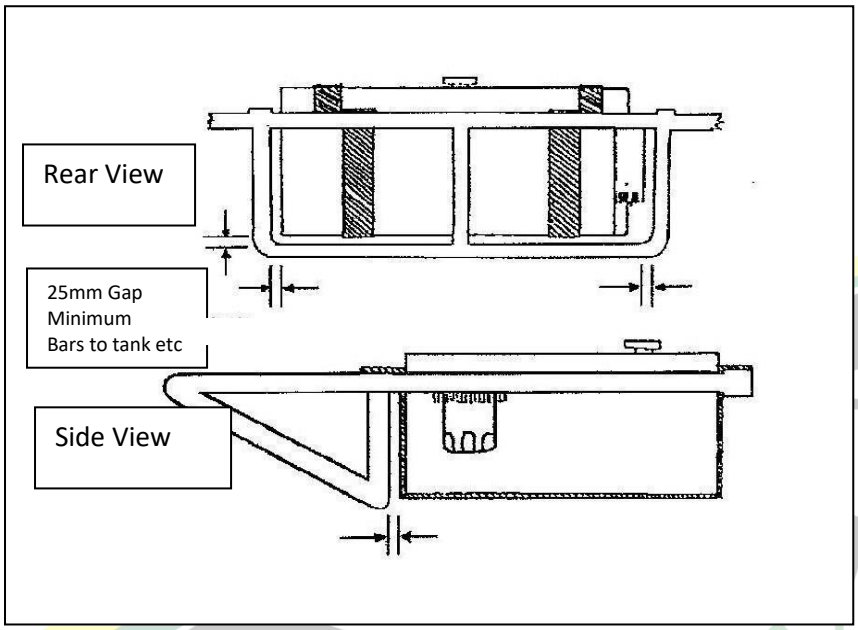

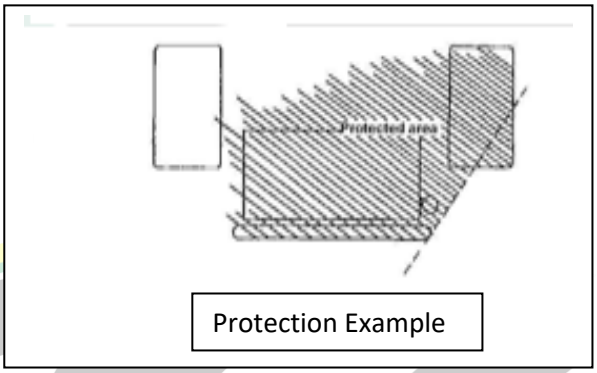

18. TABLES

TABLE 1. LIST OF APPROVED/ACCEPTED MAKES/MODELS – if the car you are interested in is not listed here you must make application for inclusion – prior to commencing to build – your car may not be automatically accepted. Click Here

HOLDEN	**FORD**
Gemini TG 1983-85	Cortina TF 1981
Holden Apollo JK-JL 1989-1992	Focus 2007
	Escort RSMKII 1976
CHRYSLER/MITSUBISHI	Escort Sport 1976
Scorpion 1980-1985	Escort RS2000 1977-1978
Lancer 1992	Sierra RS500
Lancer CG 2002	Laser KB 1984
Lancer 2007	Laser TX3 1988
Lancer CJ 2008 (01/07/21)	Laser 1996
Lancer CE 1996-2001 – 2 Door (01/07/21)	Fiesta 2006

Lancer CE 1996-2001 – 4 Door (01/07/21)	Telstar
Mirage 1996 – 2001 (01/07/21)	
Sigma 1982-1987	**NISSAN**
	Datsun 1600 1971
TOYOTA	Datsun 1200 1970-73 (01/07/18)
Corolla Generation 3 (01/07/21)	Nissan Pulsar N13 (01/07/18)
Corolla 1979	Nissan Pulsar N14 1990/94 (01/07/18)
Corolla Seca 87-92	Nissan Pulsar N15 (01/07/18)
Celica 1978-1981	Nissan Bluebird 910 1983-85
Altezza RS200 1998	Nissan Pintara – 1989
Corona 1983 ST141 (16/09/18)	Nissan – Silvia – 1989
	Nissan Exa 1995
MAZDA	Nissan 200SX 1996
Mazda 626 1983	
Mazda 121 Bubble DB 1997	**BMW**
Mazda 3 2007	E 30
*Mazda RX7 Series 5 1989/91 (01/07/18)	
	DAIHATSU
HONDA	89 Charade
Honda Integra 1989-1993 2gen 3 Door	93 Charade
Honda Integra 1989-1993 2gen 4 Door	
Honda Civic 1992	**HYUNDAI**
Honda Civic 1991 (H22a engine) (01/07/2020)	Excel 1998
Honda Prelude 1993	
Honda CRX 1994	**PORSCHE** (16/09/17)
Honda Prelude 1994	Porsche 944 1981-1988
Honda Prelude 1997	
Honda Accord 1994 (14/09/19)	**SUBARU**
	Liberty 1991
National 4 Standards	Liberty 1996
All makes/models permitted in SSA Junior Sedans	

TABLE 2 - DIMENSIONS

Note:

***Listed measurements for the track include the 75mm max. allowance and 200mm rim measurement. (Std + 75mm + 200mm) - to accommodate SSA Wheel Track measuring tool**

**Method of measuring wheelbase shall be; with each front wheel pointing straight ahead. Measure distance from front axle centre to rear axle centre on each side of vehicle. Add dimensions for left and right and divide by 2, allowable tolerance is +/- 1%. (01/07/2020)

MODEL	WHEELBASE MM	**WHEELBASE MINIMUM/MAXIMUM	FRONT TRACK MM	REAR TRACK MM
HOLDEN		New 01/07/2020		
Gemini TG 1983-85	2404	2380 / 2428	1596	1600
Holden Apollo JK-JL 1989-1992	2600	2574 / 2626	1745	1745

MODEL	WHEELBASE MM	**WHEEL BASE MINIMUM/MAXIMUM	FRONT TRACK MM	REAR TRACK MM
FORD		New 01/07/2020		
Cortina TF 1981	2578	2552 / 2604	1701	1701
Focus 2007	2640	2614 / 2666	1810 (01.07.21)	1806 (01.07.21)
Escort RSMKII 1976	2407	2383 / 2431	1595	1588
Escort Sport 1976	2407	2383 / 2431	1595	1588
Escort RS2000 1977-1978	2407	2383 / 2431	1595	1588
Sierra RS500	2608	2582 / 2634	1727	1743
Laser KB 1984	2365	2341 / 2389	1665	1675
Laser TX3 1988	2400	2376 / 2424	1665	1690
Laser 1996	2605	2579 / 2632	1735	1735
Fiesta 2006	2486	2461 / 2511	1749	1719
Telstar	2520	2485 / 2535	1705	1700

MODEL	WHEELBASE MM	**WHEEL BASE MINIMUM/MAXIMUM	FRONT TRACK MM	REAR TRACK MM
CHRYSLER/MITSUBISHI		New 01/07/2020		
Scorpion 1980-1985	2530	2505 / 2555	1655	1665
Lancer 1992	2455	2430 / 2480	1705	1705
Lancer CG 2002	2600	2574 / 2626	1745	1745
Lancer 2007	2600	2574 / 2626	1745	1745
Lancer CJ 2008 (01/07/21)	2635	2609 / 2661	1805	1805
Lancer CE 96-01 2 Door (01/07/21)	2415	2391 / 2439	1725	1735
Lancer CE 96-01 4 Door (01/07/21)	2500	2475 / 2525	1725	1735
Mirage 96-01 (01/07/21)	2415	2391 / 2439	1725	1735
Sigma 1982-1987	2530	2505 / 2555	1655	1625

MODEL	WHEELBASE MM	**WHEEL BASE MINIMUM/MAXIMUM	FRONT TRACK MM	REAR TRACK MM
TOYOTA		New 01/07/2020		
Corolla Generation 3	2370	2346 / 2394	1595 (01/07/21)	1575 (01/07/21)
Corolla 1979	2370	2346 / 2394	1570	1560
Corolla Seca 87-92	2430	2406 / 2454	1705	1685
Celica 1978-1981	2500	2475 / 2525	1625	1640
Altezza RS200 1998	2670	2643 / 2697	1770	1760
Corona 1983 ST141 (16/09/18)	2500	2475 / 2525	1650	1625

MODEL	WHEELBASE MM	**WHEEL BASE MINIMUM/MAXIMUM	FRONT TRACK MM	REAR TRACK MM
NISSAN		New 01/07/2020		
Datsun 1600 1971	2420	2396 / 2444	1555	1555
Datsun 1200 1970-73 (01/07/18)	2300	2277 / 2323	1515	1520
Nissan Pulsar N13 (01/07/18)	2430	2406 / 2454	1710	1705
Nissan Pulsar N14 1990/94 (01/07/18)	2430	2406 / 2454	1720	1710
Nissan Pulsar N15 (01/07/18)	2535	2510 / 2560	1745	1710
Nissan Bluebird 910 1983-85	2525	2500 / 2550	1655	1635
Nissan – Pintara – R31 (01/07/25)	**2615**	**2589 / 2641**	**1700**	**1681**
Nissan Pintara – 1989	2550	2525 / 2575	1735	1715
Nissan – Silvia – 1989	2475	2450 / 2500	1675	1700
Nissan Exa 1995	2410	2386 / 2434	1665	1655
Nissan 200SX 1996	2525	2500 / 2550	1755	1745

MODEL	WHEELBASE MM	**WHEEL BASE MINIMUM/MAXIMUM	FRONT TRACK MM	REAR TRACK MM
MAZDA		New 01/07/2020		
Mazda 626 1983	2510	2485 / 2535	1645	1655
Mazda 121 Bubble DB 1997	2390	2366 / 2414	1695	1675
Mazda 3 2007	2640	2614 / 2666	1805	1790
*Mazda RX7 Series 5 1989/91 (01/07/18)	2430	2406 / 2454	1725	1715
*Must be fitted with a Mazda 4-cylinder engine only – no rotary engine allowed				

MODEL	WHEELBASE MM	**WHEEL BASE MINIMUM/MAXIMUM	FRONT TRACK MM	REAR TRACK MM
HONDA		New 01/07/2020		
Honda Integra 1989-1993 2gen 3 Door	2550	2524 / 2576	1750	1750
Honda Integra 1989-1993 2gen 4 Door	2600	2574 / 2626	1750	1750
Honda Civic 1992	2570	2544 / 2596	1750	1740
Honda Civic 1991 (H22a engine) (01/07/2020)	2500	2475 / 2525	1725	1730
Honda Prelude 1993	2550	2524 / 2575	1800	1790
Honda CRX 1994	2300	2277 / 2323	1725	1730
Honda Prelude 1994	2550	2524 / 2575	1800	1790
Honda Prelude 1997	2586	2560 / 2612	1799	1789
Honda Accord 1994 (14/09/19)	2715	2688 / 2742	1790	1775

MODEL	WHEELBASE MM	**WHEEL BASE MINIMUM/MAXIMUM	FRONT TRACK MM	REAR TRACK MM
BMW		New 01/07/2020		
E 30	2570	2544 / 2596	1682	1690

MODEL	WHEELBASE MM	**WHEELBASE MINIMUM/MAXIMUM	FRONT TRACK MM	REAR TRACK MM
DAIHATSU		**New 01/07/2020**		
89 Charade	2340	2317 / 2363	1660	1640
93 Charade	2340	2317 / 2363	1660	1640

MODEL	WHEELBASE MM	**WHEELBASE MINIMUM/MAXIMUM	FRONT TRACK MM	REAR TRACK MM
HYUNDAI		**New 01/07/2020**		
Excel 1998	2400	2376 / 2424	1695	1685

MODEL	WHEELBASE MM	**WHEELBASE MINIMUM/MAXIMUM	FRONT TRACK MM	REAR TRACK MM
SUBARU		**New 01/07/2020**		
Liberty 1991	2480	2455 / 2505	1740	1735
Liberty 1996	2630	2604 / 2656	1735	1730

MODEL	WHEELBASE MM	**WHEEL BASE MINIMUM/MAXIMUM	FRONT TRACK MM	REAR TRACK MM
PORSCHE (16/09/17)		**New 01/07/2020**		
Porsche 944 1981-1988	2400	2376 / 2424	1675	1650

Table 3

FRONT WHEEL DRIVE TO REAR-WHEEL-DRIVE CONVERSION – ENGINE SET BACK	
Ford Focus 2007 (14/09/19)	330mm
Ford Fiesta 2012	